PlantWatch

Installation and user manual

LEGGI E CONSERVA QUESTE ISTRUZIONI

READ AND SAVE THESE INSTRUCTIONS

CAREL

Technology & Evolution

LEGGI E CONSERVA QUESTE ISTRUZIONI

READ AND SAVE THESE INSTRUCTIONS

We wish to save you time and money!
We can assure you that the thorough reading of this manual will guarantee correct installation and safe use of the product described.

IMPORTANT WARNINGS

BEFORE INSTALLING OR HANDLING THE DEVICE PLEASE CAREFULLY READ AND FOLLOW THE INSTRUCTIONS DESCRIBED IN THIS MANUAL.

This appliance has been manufactured to operate risk-free for its specific purpose, as long as:

- *it is installed, operated and maintained according to the instructions contained in this manual;*
- *the environmental conditions and the voltage of the power supply correspond to those specified.*

All other uses and modifications made to the device which are not authorised by the manufacturer are considered incorrect.
Liability for injury or damage caused by the incorrect use of the device lies exclusively with the user.
Please note that the machine contains powered electrical devices and therefore all service and maintenance operations must be performed by specialist and qualified personnel who are aware of the necessary precautions.
Disconnect the machine from the mains power supply before accessing any internal parts.

Disposal of the parts of the controller:
The controller is made up of metal and plastic parts and contains a lithium battery. All these parts must be disposed of according to the local standards in force.

Cleaning the controller
Only use neutral detergents and water.

CONTENTS:

1. INTRODUCTION 1
1.1 General characteristics 1
1.2 Codes 1
1.3 Meaning of the connectors 2
2. INSTALLATION 3
2.1 Mounting PlantWatch 3
2.2 Connection diagrams 4
3. USER INTERFACE 5
3.1 Meaning of the buttons 5
3.2 Meaning of the LEDs 6
3.3 Operation 6
3.4 Display screens 7
3.4.1 Main screen (Ref. Fig. 3.4.1.1) 7
3.4.2 Display event log (see Fig. 3.4.2 a) 9
3.4.3 Print menu 10
3.4.4 Log Info menu 10
3.4.5 GSM Info menu 10
3.4.6 Software version menu 11
3.4.7 Display instrument values 11
3.4.8 Automatic rotation of status screens 11
3.5 Configuration screens 11
4. EVENT LOG 13
5. ALARM MANAGEMENT 14
5.1 Introduction 14
5.1.1 Alarm priorities 14
5.2 Alarm display and management 15
5.3 Disabling the alarms for maintenance 15
6. VARIABLES LOG 16
6.1 Characteristics 16
6.2 Operation 16
6.2.1 Memory full signal 16
6.2.2 Acquisition of analogue variables 16
6.2.3 Acquisition of digital variables 17
6.2.4 Number of variables that can be saved 17
6.2.5 Recording time 17
6.3 Keypad commands 18
6.4 Configuration from the PC 18
7. PRINTER MANAGEMENT 19
7.1 Print formats 19
7.2 Automatic printing 23
7.3 Cancel a report being printed or realign the paper 23
8. REMOTE SIGNALLING 24
8.1 FAX transmission 24
8.1.1 Creating the fax 24
8.1.2 Call management 25
8.2 Send SMS 25
8.2.1 Send SMS using GSM modem 25
8.2.2 Send SMS using the telephone line (PSTN) modem 25
8.2.3 Format of the SMS message 26
8.3 Call to the data centre 27
8.4 Activation of the alarm relays 27
9. PARAMETERS AND CONFIGURATION PROCEDURE 28
9.1 Parameter programming 28
9.2 List of parameters 28
9.3 Description of the parameters 32
9.3.1 Maintenance 32
9.3.2 Parameters > General 33
9.3.3 Parameters > FAX-Modem 35
9.3.4 Parameters > Printer 37
9.3.5 Parameters > Alarms/logs 38
9.3.6 Language selection 40
10. QUICK CONFIGURATION 41

11. CONFIGURATION USING PLANTWATCH MANAGER 42
11.1 Introduction 42
11.1.1 Connections and pre-settings required 42
11.1.2 Editing and creating of the "templates" that describe the instruments 42
11.1.3 Multiple "templates" and self-configuration 42
12. INSTRUMENT CONFIGURATION 43
12.1 RS485 RS232 direct mode 43
13. TECHNICAL SPECIFICATIONS 44
13.1 Software characteristics 44
13.2 Electrical and mechanical specifications 44
13.3 General characteristics 45
13.4 Dimensions 45

1. INTRODUCTION

PlantWatch is an electronic device used to supervise a network of Carel instruments.

- *It records and manages all alarms;*
- *It records the main set values;*
- *It can transfer the sampled values to a service centre, via modem;*
- *It allows the parameters of the instruments to be modified using a computer;*
- *It can also send notification of alarms via fax, SMS and generate automatic printed reports.*

Its main use is for the supervision of small and medium-sized systems.
PlantWatch records the values measured by the instruments it is connected to, it is not a stand-alone datalogger: it is not fitted with its own probes.
NOTE: hereinafter the term "saving data" will be replaced by the equivalent technical expression "log".

1.1 General characteristics

PlantWatch, while featuring functions that can normally be obtained only using a personal computer, is extremely compact and easy to use.
The keypad and the LCD display can be used to set the fundamental parameters, making it completely independent. In addition, its operation does not require the installation of any external device or software.
Even greater flexibility can be obtained using the options available for the PlantWatch line. The remote connection, fax and SMS features are available only when PlantWatch is fitted with a modem.
*PlantWatch is available in two versions: the version with internal modem **PLW00M0000**, and the basic version **PLW00B0000** that can be connected externally, using the adapter **PLW0PMD000**, a PSTN or GSM modem.*
*The printer adapter **PLW0PPRT00** (desktop model) or **PLW0PPRD00** (DIN rail model) allows a parallel printer to be connected to any point of the PlantWatch RS485 network. The same device also performs the function of serial network watch-dog.*

1.2 Codes

codes	***description***
PLW00B0000	*basic version, power supply 230V*
PLW00M0000	*version with internal PSTN 33.6 modem. Power supply 230V, EU approved*
PLW0PPC000	*Kit for RS232 serial connection to a personal computer. The kit consists of:* • *5-metre, 8-way flat cable with RJ45 connectors* • *RJ45-Db9 female adapter with DCE connections for direct connection to the PC's serial port* • "PlantWatch Manager" *configuration software.*
PLW0PMD000	*Kit for connecting an external modem. The kit consists of:* *5-metre, 8-way flat cable with RJ45 connectors* *RJ45-Db**25** male adapter with DCE connections for direct connection to the 25 pin female port on the modem.* *RJ45-Db**9** male adapter with DCE connections for direct connection to the 9 pin female port on the modem.*
PLW0PPRT00	*Parallel printer adapter module for the Carel RS485 network, desk-top version complete with 230V power plug.*
PLW0PPRD00	*Parallel printer adapter module for the Carel RS485 network, DIN rail version.*

Table 1.2.1

All the versions of PlantWatch feature an RS232 port on 8-way RJ45 connector.
Use channel 1 in Figure 1.3.1 for a permanent connection (maximum length 10m) or alternatively remove the front panel for the initial configuration or downloading the data logs. The connection to the PC is made using a cable adapter from the telephone connector to a DB9 female connector.
*All the versions feature the management of a Centronics parallel printer using an optional module connected to the RS485 peripherals network (**PLWOPPRT00/ PLWOPPRD00**)*

1.3 Meaning of the connectors

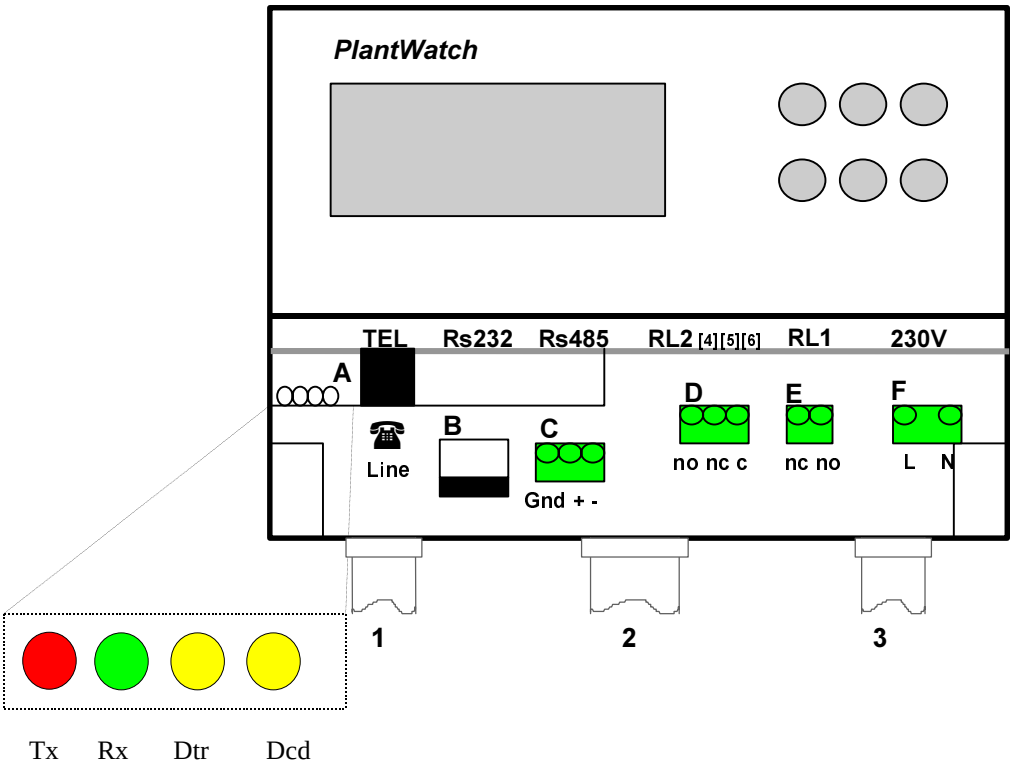

Fig. 1.3.1

*Meaning of the LEDs on the internal modem board (**model PLW00M0000** only)*

LED	***meaning***	***action***	
Tx (red)	*Data transmission*	*PW ⇒ remote modem*	*Flashes during communication*
Rx (green)	*Data reception*	*PW ⇐ remote modem*	*Flashes during communication*
Dtr (yellow)	*Data terminal ready*	*PW modem ready*	*Always ON with some flashes*
Cd (yellow)	*Carrier detect*	*connecting to remote modem*	*Always ON during communication*

Table 1.3.2

Description of the connectors

A	*6-way RJ-11 for PSTN telephone line (only for version with internal modem)*
B	*8-way RJ-45 for RS232 serial (downloading log, uploading parameters, code and external modem connection)*
C	*3-way RS485 serial terminal for connection to Carel controllers and printer board*
D	*3-way terminal for 230V alarm signal (relay RL2)* *Contacts 4-6 = normally open* *Contacts 5-6 = normally closed*
E	*2-way terminal for 230V external modem reset (relay RL1)*
F	*230V or 110V power supply (depending on the version)*

Table 1.3.3

Warnings and use of the channels

1	*Use channel **1** to pass the telephone line cable; no other cables, not even very low voltage cables, may pass through this channel*
2	*Use channel **2** for the RS485 line that connects the Carel instruments; it may also be used at the same time to pass the lines carrying any very low voltage safety loads activated by relays 1 and 2. This channel can also be used for the RS232 line if using the external modem or a permanent connection to the personal computer*
3	*Channel **3** should be used to pass the PlantWatch power supply line and for the lines of any mains voltage loads activated by relays 1 and 2*

Table 1.3.4

2. INSTALLATION

2.1 Mounting PlantWatch

PlantWatch must be wall-mounted.
- Unscrew the two front screws [see Fig. 2.1.1 – Ref. a) and b)] and remove the front panel (Ref. c).
- Unscrew the two screws [Ref. d), e)] that hold the lower shell and the front panel of PlantWatch together, and separate the two parts.
- After having chosen where to pass the channel and having made the corresponding holes (in the pre-drilled lower part - i) for the cable or tubing glands, make the three holes (m, n, o) in the wall.
- Insert the channels only in the lower part of the device.
- Insert the "wall" screw anchors supplied in the kit, into the holes made in the wall, and then fasten the rear part of the PlantWatch device to the wall using the three screws (m, n, o) and corresponding O-rings.
- Fasten the cable or tubing glands before fitting the front panel of the PlantWatch device.
- Then fit the front panel, paying attention to the position of the upper teeth (h) and the correct fastening of the 2 screws (d, e) (do not over-tighten, so as to not deform the plastic).
- Only after having connected the wires to the terminal block in the PlantWatch device, close the front panel (c).

Caution: after completing the wiring operations, strap the wires together for each group of terminals, so as to ensure safety if one individual wire is detached

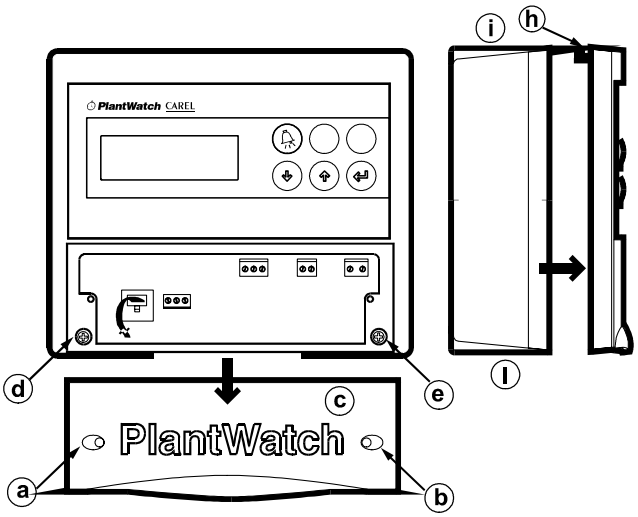

Fig. 2.1.

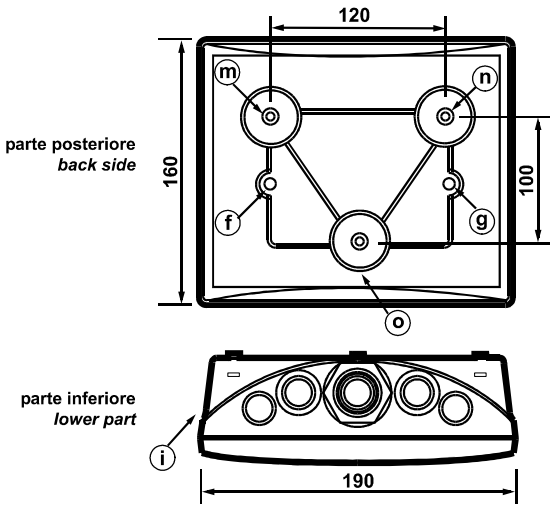

Fig. 2.1.2

Warnings:

1. *Do not install the instrument in environments with the following characteristics:*
   - wide and rapid fluctuations in ambient temperature;
   - relative humidity over 80%;
   - exposure to direct pressurised jets of water;
   - high levels of magnetic and/or radio frequency interference (e.g. from transmitting antennae);
   - exposure to direct sunlight and the elements in general.
2. *Use cable ends suitable for the corresponding terminals. Loosen each screw and insert the cable ends, then tighten the screws.*
3. *When the operation is completed, slightly tug the cables to check that they are sufficiently tight.*
4. *Separate as much as possible the signal cables from the cables carrying inductive loads and power cables to avoid possible electromagnetic disturbance. Never insert power cables (including the electrical cables) and RS485, RS232 signal cables in the same channels. The telephone system must use completely separate channels, as per the relative standards.*
5. *The lightning symbol inside an equilateral triangle signals the presence of dangerous voltages.*
6. *Avoid touching or nearly touching the electronic components on the boards, to avoid electrostatic discharges (extremely damaging) from the operator to the components.*
7. *The set-up procedure via RS232 ("PlantWatch manager") with the door open may only be performed by 'specialist personnel', in that powered parts are accessible (power supply and telephone network).*

8. *Make sure the PlantWatch device is electrically isolated before removing/opening the front panel and/or performing any connections.*

2.2 Connection diagrams

Refer to Figure 1.3.1

Power supply - Ref. terminal F
PlantWatch must be supplied, as shown in the characteristics, by a dedicated electrical line fitted with an exclusive and easily accessible two-pole disconnecting switch.

Reset external modem - Ref . terminal E
*Terminal **E** may be used for the power supply of the external modem. It is used only if the configuration includes the external modem.*
The relay is normally closed; when PlantWatch is reset and then at regular 20 minute intervals, before sending the modem initialisation commands, it is open to ensure the hardware reset of the modem. The opening time is 1.5 seconds.

Alarm relay RL2 - Ref . terminal D
The alarm relay allows the PlantWatch to be connected to signal devices, such as telephone diallers, signal lamps etc.... The normally open/closed modes or the activation time can be selected by setting the corresponding parameter.

RS485 network - Ref . terminal C
This terminal is connected to the 3-wire RS485 network (twisted pair + shield) that connects the instruments controlled by PlantWatch. The network should be terminated with a 120Ω, ¼ watt resistor.
Use AWG20/22 cables with a capacity between the leads of less than 90pF/m (BELDEN 8761-8762 cables).
The RS485 section is optically-insulated from the other signals present in the PlantWatch system (RS232 line and telephone line).

RS232 line – Ref. connector B
The RS232 line is available using an 8-way telephone connector.
The direct connection to a personal computer or to the external modem can be made using the adapters supplied in the PLW0PMD000 kit for connection to the modem, or in the PLW0PPC000 kit for connection to the PC.
The kit includes a 5-metre, 8-way flat cable fitted with male connectors. If the length of cable supplied is not sufficient, an 8-way telephone cable can be wired to the required length (maximum length 10 metres).

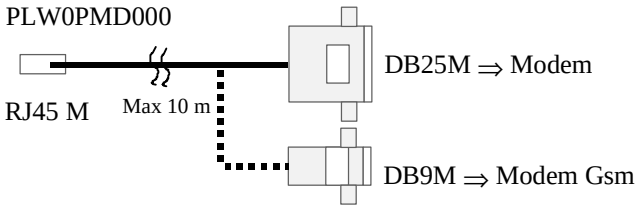

Fig. 2.2.1

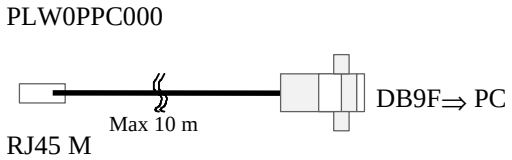

Fig. 2.2.2

Telephone line – Ref. connector A
*Connector A (RJ-11) is present only in the PlantWatch version fitted with internal modem, code **PLW00M0000**. It can **only** be used for connection to a PSTN telephone line.*

3. USER INTERFACE

The user interface is made up of an alphanumeric LCD display, with 4 rows of characters, and a 6-button keypad, 4 of which are backlit.

Fig. 3.1.1

3.1 Meaning of the buttons

Button	Function
(⇦)	• Silences the buzzer and displays the alarms, holding for 3 seconds deactivates the alarm relay. • Moves the cursor to the left when editing.
(⇨)	• Pressed for 3 seconds allows the parameters to be set (password) • Moves the cursor to the right when editing.
(Esc)	• Returns to the main screen of the root menu • Returns to the previous selection menu screen • Cancels the modifications to the current field (edit) • Pressed for 3 seconds when programming the parameters, cancels the modifications made and exits this mode
	• scrolls the screens • decreases the current field (edit)
	• scrolls the screens • increases the current field (edit)
(Enter)	• confirms the current field
+	• Decreases the contrast of the display
+	• Increases the contrast of the display

Table 3.1.1.

3.2 Meaning of the LEDs

LED	Function
	• *flashing: at least one alarm active* • *stays on: no active alarms, but the alarms have not yet been displayed*
	• *parameter programming status*
(Enter)	• *power connected*

Table 3.1.2.

3.3 Operation

The screens on the LCD display are organised into two main sections, one corresponding to the display only of the data, which contains the main screen, and the other containing the configuration screens, accessible fully or in part after having entered the password (see paragraph 9).
On start-up, PlantWatch goes to the main screen of the display-only branch.
The buttons used to move between the screens are ⇑, ⇓, ↵ and **Esc**.
The arrow buttons ⇑ and ⇓ scroll the screens on the same level. When the screen shows the "> "symbol followed by a name, it means that this screen is a menu, the names are the descriptions of the branches of screens which can be accessed.

```
View events log
>All
>Only Active
```

Fig. 3.3.1

In a menu screen, the ↵ **Enter** *button selects the first item on the menu, while the arrow buttons ⇑ and ⇓ scroll the other items. Once the item required has been selected, the ↵* **Enter** *button accesses the first screen of the selected branch. At this point, the arrows ⇑ and ⇓ scroll the screens, the ESC (Escape) button returns to the previous selection menu.*
In the screens that feature modifiable fields, the ↵ **Enter** *button selects the various fields in sequence, in this case the screens can be scrolled again only when the cursor returns to the top left position.*
When the cursor is in a field, the arrow buttons ⇑ and ⇓ increase or decrease the current values (numeric fields) or character (strings), while the horizontal arrows ⇐ and ⇒ move the cursors to the adjacent digits/characters.
In a numeric field, increasing from the number 9 increases the next highest digit.
Inside a field, pressing the **Esc** *button resets the value prior to the modification.*

3.4 Display screens

On start-up, PlantWatch displays the main screen that summarises the status of the instruments, the status of PlantWatch itself, and the current date and time.
From this screen, the ⇑ and ⇓ buttons can be used to scroll the display of the current values sampled from the instruments and to access the menus:

- *display the log of the events/alarms,*
- *perform manual prints,*
- *status information.*

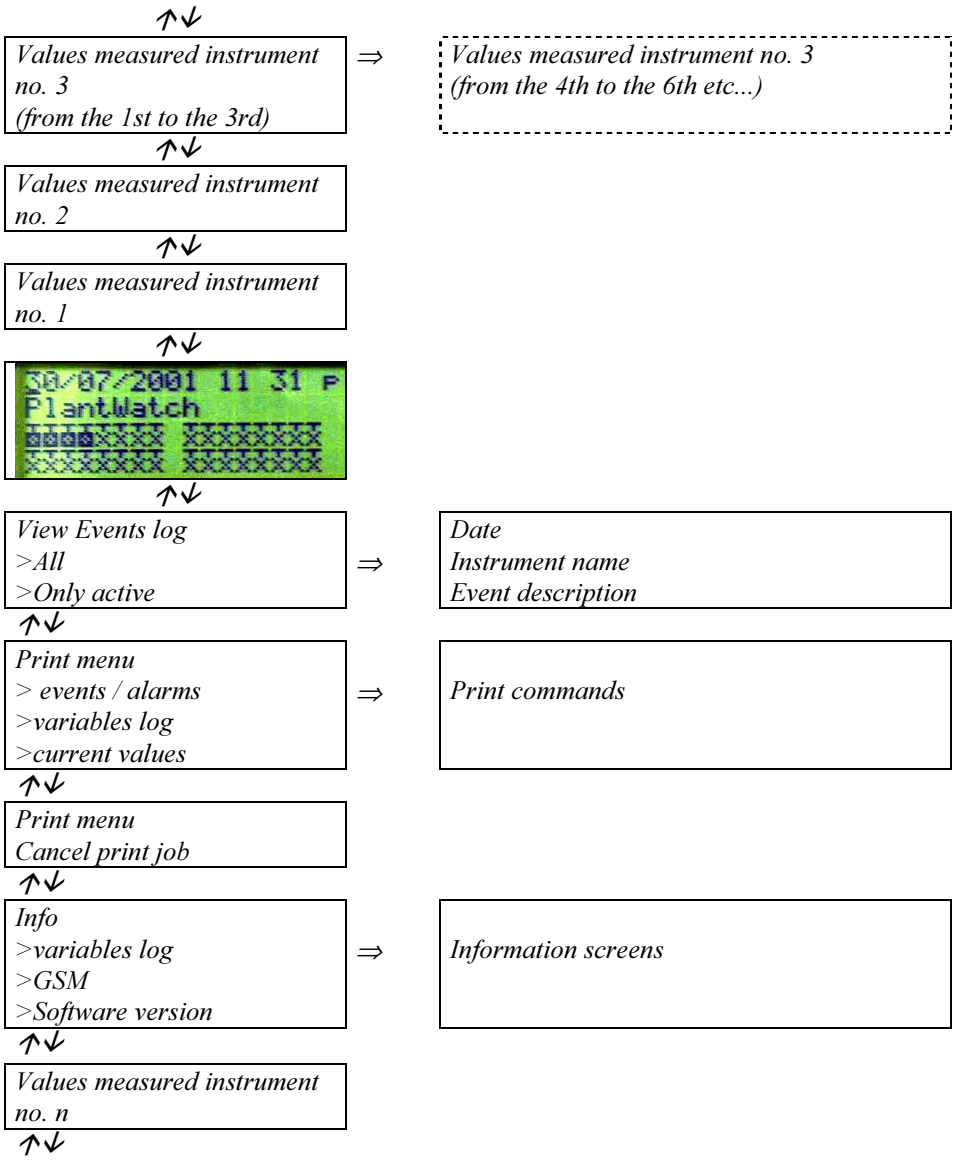

Fig. 3.4.1

3.4.1 Main screen (Ref. Fig. 3.4.1.1)

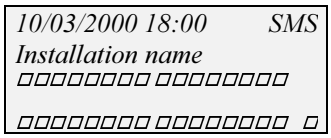

Fig. 3.4.1.1

Row 1
The first row displays the current date and time, in addition the character in the top right indicates the status of the modem (if no modem is present, no symbol is displayed).

***Symbols used**:*

W/w	*alternating - waiting for call (normal operating status)*
dd	*dialling number for data transmission*
Dd	*waiting for connection after dialling number for data transmission*
Dsm	*dialling number to send SMS message by PSTN modem*
Dfx	*waiting for connection after dialling number to send fax*
F/f	*alternating - Fax transmission in progress*
h	*disconnecting*
i	*initialising modem*
O	*Connection between modems, wait for login from data centre*
p	*connecting*
R	*ring received: waiting for connection*
SMS	*Sending SMS message, GSM and PSTN*
net	***GSM modem only**: request network information, signal intensity and save network*
Pn?	***GSM modem only**: Request PIN status from modem*
Pn	***GSM modem only**: Send PIN*
PIN	***GSM modem only**: Error PIN, the PIN entered is not the same as the one saved in the board, the modem cannot be used!*

Table 3.4.1.1

Row 2

*If there are no active alarms, the string "**installation name**" is displayed, as set by the user during configuration, or alternatively the text "**Active alarms:**" followed by a number that represents the number of active alarms.*

Rows 3 and 4

The symbols of the peripherals from 1 to 32 indicate:		
☐	empty rectangle	*peripheral on-line - no active alarm*
■	filled rectangle, flashing	*peripheral on-line with active alarms*
☒	rectangle with x inside	*peripheral on-line but the user has permanently disabled the alarms using PlantWatch Manager*
☒	rectangle with x inside, flashing	*peripheral on-line but the user has disabled the alarms for maintenance (see procedure in par. 5.3)*
╳		*peripheral off-line*
—		*not present in configuration*

Table 3.4.1.2

An empty space separates the symbols into groups of 8, so as t to assist in identifying the addresses of the peripherals.

The symbol in the lower right indicates the status of the printer module:		
⊟	empty rectangle with horizontal line inside	*printer module on-line - no print alarm active*
■	filled rectangle, flashing	*printer module on-line, but the printer is blocked; this is the only print alarm managed by PlantWatch, and in fact may be generated only following a print action that is not satisfied*
☒	rectangle with x inside	*printer module off-line*

Table 3.4.1.3

*If the character "**!**" is displayed to the side of the printer symbol, the printer is off-line or an error has occurred. This may be due to no paper, the paper being jammed, the user having put the printer off-line, or the printer being off.*
*The "**!**"character is a signal only, and no data is saved to the event log. In fact, the "**!**"character does not represent an alarm until PlantWatch starts printing, in which case an alarm is generated. This may be signalled remotely or not, depending on the configuration (see Chap.* Alarm management*).*

3.4.2 Display event log (see Fig. 3.4.2 a)

*The event log can be displayed from the menu "**Display event log**".*
*Selecting "**All**" displays all the events saved, from the oldest to the most recent; the ⇓ and ⇑ buttons can be used to scroll the list backwards and forwards, while the **!** symbol indicates the active alarms.*
*If selecting "**Only active**", the list will only contain the active alarms, plus the PlantWatch start-up event.*
The list of active alarms can also be displayed directly by pressing the 🔔 button.
*If no alarm is active and there are alarm records that have not yet been displayed, accessing this function using the "**Alarm**" button will switch off the red LED (see alarm management). In the latter case, the scrolling of the display using the ⇓ button will stop at the last alarm not yet displayed.*

View events log *>All* *>Only Active*

Fig. 3.4.2 a

! 2/01/2000 18:34:23 *START ALARM* *15: Vegetable cab. 1* *High temperature*	*28/02/2000 13:31:23* *START ALARM* *PW: modem initialising error*	*29/02/2000 14:34:10* *PW: edit param.* *User Name*	*28/02/2000 18:34:56* *End alarm* *PW: modem initialising error*
Fig. 3.4.2 b	***Fig. 3.4.2 c***	***Fig. 3.4.2 d***	***Fig. 3.4.2** and*

Row 1
Row 1 shows the date and time at which the event occurred.
*If the first character displayed in the top left is an exclamation mark (**!**), the alarm is still active.*

Row 2
*In the case of a display-only event, nothing is displayed (Ref. Fig. 3.4.2 d). If there is an alarm, the second row displays the text "**START ALARM**" (Ref. Fig. 3.4.2 b - c) or alternatively "**end alarm**" (Ref. Fig. 3.4.2 and).*

Rows 3 and 4
Rows 3 and 4 may have 2 meanings, depending on whether the event is a peripheral *alarm or alternatively an* event/alarm *generated internally by PlantWatch (for example, modem initialisation error, printer offline,...):*

- Peripheral alarm
  row 3: ***nn: peripheral name*** *(Ref. Fig. 3.4.2 b)*
  Where: ***nn*** *= physical address of the peripheral*
  peripheral name *= name assigned to the peripheral by the user during configuration (category + description + progressive number)*
  row 4: ***alarm description*** *(Fig. 3.4.2 b - c - d – e)*

- Internal event/alarm
  row 3: ***"PW: alarm/event description"*** *(Fig. 3.4.2 c - d – e)*
  row 4: ***alarm/event description*** *(Fig. 3.4.2 b - c - d – e)*

3.4.3 Print menu

Print events *From 9/04/2001 15:44* *To 9/04/2001 16:44* *Start: No*	*Print daily logs* *Day 9/04/2001* *Interval: 10min* *Start: No*	*Print daily logs grouped* *Day 9/04/2001* *Start: No*	*Print weekly logs* *Day 2/04/2001* *Mon* *Start: No*
Print Input Values *Start: No*	*Print menu* *Cancel print job?* *No*		

Fig. 3.4.3.1

This menu allows the immediate printing of the event log, the variable log and the current values read by the instruments.
The variable log is printed as described in the chapter Printer Management.
To cancel an unwanted print procedure, intervene by responding ***YES*** *to the "****Cancel print job?****" question in the corresponding screen. This always realigns the paper, even if there are no prints in progress. The print can also be cancelled directly from the printer module by pressing and holding the* **print/clear** *button for more than 4 seconds. If the prints are misaligned, it is recommended to perform this procedure and then feed the paper manually.*

3.4.4 Log Info menu

Variable logs *Free space:84%* *Duration: 17d 1:00*

Fig. 3.4.4.1

The Info → Logs *menu displays the percentage of free memory available for saving the logs and the duration of the variable log, expressed in days:hours:minutes.*
The duration refers to the group of values (digital and analogue values saved at high or normal frequency) that would fill the available memory, see Chap. Variables log.

3.4.5 GSM Info menu

This menu is active only if a GSM modem is connected.
The following information is available: the name or the code of the network operator providing the service, the intensity of the signal received (%), and the error rate that the modem is detecting.

Gsm info *Reading info*	*Gsm info* *Searching for network*	*Gsm info* *"operator name"* *Signal: 40% Err: 0%*

Fig. 3.4.5.1

The name of the network operator is indicated as a text only if present in the internal list; if this is not the case, the numeric country code is displayed, followed the operator's code.
*The intensity of the field (****Signal****) indicates the reliability of the communication.*
For correct communication this value should be greater than 20%.
*The error rate (****Err****) indicates the effective quality of the signal received; in optimal conditions this value should be 0.*
*The initialising of the modem (****send PIN****) and reading of the data is indicated by the text* ***Reading Info****. If no signal is available from the network operator, the text* ***Searching for network*** *is displayed.*

3.4.6 Software version menu

```
Firmware revision
V1.3 Apr  9 2001
Checksum: C4534C
Cfg: 9/04/2001 16:42
```

Fig. 3.4.6.1

This menu allows accessing to the following information:
- Version and date of compilation of the firmware;
- checksum of the firmware;
- date and time of the most recent modification to the parameters: this data is updated whenever the configuration of the parameters is modified, locally or by serial connection (directly or via modem).

3.4.7 Display instrument values

```
02:Instrument name
Variab. name 1:  20.3
Variab. name 2:  -12.3
Variab. name 3:  -2.3
```

Fig. 3.4.7.1

Pressing the ⇑ button from the main screen scrolls, in sequence, the screens displaying the current values of the variables acquired by the instruments.
*The log values from a specific unit can be displayed in groups of three for each instrument (see PlantWatch Manager). The ⇑ button scrolls the unit, while the ⇒ (***Prg***) button scrolls the other groups of 3 values, when present.*
If the peripheral selected is off-line, the numeric fields will flash and the last values acquired will be displayed. If no data has been able to be acquired, a series of five asterisks will be displayed.
Pressing the **Prg** *and 🔔 buttons together for 3 seconds when displaying the data from an instrument temporarily disables the generation of alarms from the instrument in question (see Chap.* Alarm management, Disabling alarms for maintenance*).*
*This status is displayed on the screen by an '**X**' in the place of the '**:**' in the first row.*
Pressing the **Prg** *and 🔔 buttons again for 3 seconds re-enables the alarm management.*

3.4.8 Automatic rotation of status screens

By activating the parameter "Rotation status screens" (screen g6), the main screens and screens displaying the values can be displayed automatically in sequence.
On starting PlantWatch, the display starts from the main screen, and then, at 4-second intervals, moves to the screens for instrument 1, 2, etc...
On pressing any button the rotation is suspended for 3 minutes.

```
↑                                  →
Values, instrument n-1
↑                                        ↓
.........................................
↑
Values, instrument 2                     ↓
↑
Values, instrument 1
↑
Main screen                              ↓
↑
Values, instrument n
↑                                  ←
```

Fig. 3.4.8.1

3.5 Configuration screens

The configuration screens are password protected.
*The password entry screen is displayed by pressing the (**Prg**) button for 3 seconds. If the password entered is correct, the name of the user associated to the password is displayed, along with the main selection menu.*
The configuration screens can be exited in the following ways:

- ***Exit and save the modifications:*** *pressing the (**Prg**) button and answering "**Yes**" to the question "**Save and exit?**". In this case the modifications made to the parameters are made active and saved in the flash memory.*
- ***Exit without saving the modifications:*** *pressing the (**Esc**) button for 3 seconds. This returns directly to the main display screen. The modifications are also cancelled by timeout if no button is pressed for 3 minutes.*

A complete description of the parameters and the various set-up screens is provided in the chapter Parameters and configuration procedure.

4. EVENT LOG

PlantWatch saves to flash memory the alarms from the instruments connected to the network, as well as any internal situations (alarms or display-only events).
The file that contains this information, in chronological order, is called the ***event log****.*

Events/alarms managed

Event	***Alarm***	
	•	*alarms generated by the instruments and sent to PlantWatch via the serial network*
	•	*off-line status of the instruments (no communication)*
	•	*off-line status of the printer module*
	•	*timeout error when printing*
•		*signal of the intervention of the alarm relay*
•		*signal of the intervention of the alarm relay on the printer module (when slaved to the PlantWatch relay)*
	•	*failed log download alarm (warning)*
	•	*failed log download alarm*
	•	*internal PlantWatch malfunctions (flash error, clock, modem...)*
	•	*instrument configuration errors (the type of instrument does not match the configuration)*
•		*PlantWatch start-up event*
•		*user intervention for the local modification of the parameters or the time, saving the "User Name"*
•		*user intervention to temporarily disable/enable the alarm signals for the individual unit*
•		*user intervention to delete the variable log, saving the "Username"*
•		*user intervention to reset the indication of the space available for saving the variable log, saving the "User Name"*
•		*user intervention to modify the variables of the peripherals using a local or remote serial connection*
•		*signal of the outcome of a fax transmission and the number of the recipient*
•		*signal of the outcome of a data transmission and the number of the recipient*
•		*signal of the outcome of an SMS message and the number of the recipient*

Table 4.1

The event log may be printed in real-time, or selected by operator input.
In the first case, the printer prints all the events as they occur, while in the second, the operator prints only the data for the period required.
The event log can be sent to the supervisor PC via serial line (directly, or via modem)

5. ALARM MANAGEMENT

5.1 Introduction

The alarms generated by PlantWatch can be divided into 2 groups:

- *the repeating of the alarms generated by the instruments and received by PlantWatch via the serial network*
- *malfunctions or events diagnosed independently by PlantWatch (printer errors, modem errors, peripherals off-line, failed download of logs, etc.).*

The alarms deriving from the instruments are processed by PlantWatch based on a list of typical templates for each instrument.

For each category of controller (IR32, MPX,...), PlantWatch recognises the alarm variables (digital only) and, on each positive or negative transition, generates respectively an alarm event or alarm over.
The configuration template can only be created and edited using the PlantWatch Manager *configuration program.*
The alarms are signalled instantly by the local devices (displays, red LEDs, buzzers, print-outs), while remote signalling devices (fax, SMS, data call to service centre and relay activation) are either delayed or not activated, according to the category assigned to the alarm.
In fact, each alarm is entered immediately in the event log, while the remote device is called only if the alarm remains active for a period longer than the delay time corresponding to the category that the alarm belongs to (see the following paragraph).

5.1.1 Alarm priorities

Each alarm is assigned to a different category, according to how serious it is. The categories differ in terms of the duration of the remote signalling delay:

Category	**Default delay**	**Delay configuration**
Only report	-	-
Instantaneous	*1 minute*	*fixed 1 minute*
Short delayed	*3 minutes*	*using PlantWatch Manager*
Long delayed	*30 minutes*	*using PlantWatch Manager*
The names of the categories are also used in “PlantWatch Manager”		

Table 5.1.1.1

The categories can only be assigned using the “PlantWatch manager” configuration program. *This also allows the category of the peripheral off-line alarms and printer error alarms to be modified.*

Alarm	**Default category**
Peripheral off-line	*Short delayed (3 minutes + detection time)*
Printer not ready or RS485printer module off-line	*Short delayed (3 minutes + detection time)*

Table 5.1.1.2

Furthermore, there is another category of alarms which, due to their seriousness, can only be assigned to the instantaneous category (1 minute):

- ***space available for variable log less than 20%****: the memory available for saving the logs is almost full due to the failed download, to be performed automatically at 30%,*
- ***space available for variable log equal to 0:*** *the memory available for saving the logs is full; the new data is already deleting parts of the log not yet saved by downloading or printing,*
- ***peripheral type error****: this may arise due to an error in the configuration of the type of unit connected, for example, an IR universal instead of an IR for refrigeration,*
- ***modem initialisation error****: this alarm is generated when PlantWatch cannot initialise the modem 5 consecutive times.*

This may be generated when starting PlantWatch, or alternatively when the modem is periodically re-initialised (every 20 minutes).

- ***clock error****: this is a serious internal malfunction relating to the reading of the clock*

- ***flash memory error**: this is a serious internal malfunction relating to the operating parameters or the saving of the logs.*

5.2 Alarm display and management

The presence of at least one active alarm is signalled by the flashing of the 🔔 button (red LED).
If the alarm has been generated by a peripheral (instrument or printer module), the symbol on the main screen relating to the peripheral in question flashes.
In the event where all the alarms are over, the 🔔 button remains ON until the user enters the display of the alarm/event log to definitively cancel them.

The 🔔 button has the following functions, depending on the status of the buzzer and the presence or otherwise of active alarms:

Alarms status	***Action***
Active alarms and buzzer ON	*pressing once silences the buzzer* *pressing again displays the active alarm log*
Active alarms and buzzer OFF	*pressing once displays the active alarm log*
Active alarms and alarm relay energised	*pressing for 3 seconds disables the relay*
No active alarms and 🔔 button ON	*displays the alarm/events log (all), scrolling limited to backwards, so as to show only the events occurring after the last display; turns off the 🔔 button*
No active alarms and 🔔 button OFF	*the text "**no alarm**" is displayed*

Table 5.2.1

*The alarm log can also be displayed from the "**display event log**" menu, by selecting "**All**", the entire list of alarms can be scrolled in chronological order, without limits, while selecting "**only active**" limits the scroll to the active alarms only.*
The alarms are saved to the log and printed, if activated, upon being received from the instruments, or at the moment of generation for events managed internally by PlantWatch.
The buzzer activation mode can be selected. The buzzer can be disabled, enabled with automatic silencing after a set time, or alternatively enabled to remain ON whenever there is at least one active alarm or until the operator presses the 🔔 button.

5.3 Disabling the alarms for maintenance

PlantWatch allows the alarms generated by a specific instrument to be temporarily disabled during the maintenance or cleaning of the controlled unit. The alarms must be re-enabled by the user when the unit returns to service.
A safety timer re-enables the alarms 48 hours after disabling. This delay can be set using the PlantWatch manager configuration program.
In the event of power failures affecting PlantWatch, the re-enabling time is counted from when power returns to the device .
*This operation can be performed from the screen that displays the values read by the instrument, by pressing the (**Prg**) and 🔔 buttons **together** for 3 seconds.*
*A beep of the buzzer and a message confirm the command, and a flashing "**X**' will appear instead of the "**:**" following the address of the unit.*
The disabled alarm status is also displayed on the main screen by the flashing of the symbol corresponding to the unit in question.
To re-enable the alarms, simply repeat the operation described above.
If this action is performed when there are active alarms, a corresponding message will be displayed to warn the operator of this situation.
Each intervention by the user to disable/enable the alarms is recorded in the event log.

6. VARIABLES LOG

6.1 Characteristics

Using log management, any variable from a Carel instrument read by the supervisor can be saved, be it analogue (temperature probes, pressure or humidity transducers), integer (time parameters, percentages, etc.) or digital (status of the compressors, the solenoids, the alarms or the door).
The choice of which variables to save and the type of sampling performed for each of these is linked to the template that describes the instruments.
The templates can only be created and edited using the PlantWatch manager configuration program.
In PlantWatch and the configuration program, the management of the analogue and integer variables logs has been unified, therefore, in this document, reference is made to "analogue variables" only.
The information saved can be used for a variety of purposes: for example, to record the trend over time of temperatures in refrigeration cabinets, check for the presence of intermittent faults, analyse energy consumption etc...

6.2 Operation

*To optimise the saving of the data, the variables have been divided into three groups: low frequency analogue (**LF**), high frequency analogue (**HF**) and digital (**DIG**). These feature sampling frequencies that can be set independently.*
The data is saved in "circular" mode, that is, overwriting the older data when no more memory space is available.
PlantWatch, nonetheless, warns the user with a pre-alarm when the free space is less than 20% of the total.
A second alarm is activated when the available space is equal to zero(memory full).
In this situation, the older data that has not yet been stored on file, is deleted.

6.2.1 Memory full signal

PlantWatch has an internal variable that measures, as a percentage, the free space available to save the variables log.
The local operator or the service centre are consequently warned when the corresponding memory available is nearly full. To do this, PlantWatch can generate an alarm to warn the service centre or the local operator of the need to download the log.
In the case of a service centre with permanent modem connection, PlantWatch can perform the download automatically by calling the service centre computer before the alarm is activated.
Once the transfer is complete, the free space indicator is automatically reset to 100%.
By suitably setting the "download frequency" parameter, the service centre can be called on a regular basis at a greater frequency than the time it takes to fill the memory, so that the data on the PC corresponds to the required frequency.
The log may also be downloaded to the printer only; in this case, the memory full indicator is reset when the report is printed, both when requested by the operator and automatically.
To ensure the continuity of the reports printed over time, the indicator is reset only if the reports are adjacent, that is, the data in the first sample of the current report immediately follows (or precedes) that in the last sample of the previous report.

6.2.2 Acquisition of analogue variables

As the value of the analogue variables may change significantly (for example, the temperature of an evaporator) during the recording interval, PlantWatch allows the value of greatest interest to the user to be saved for each variable, that is:

- ***Average**: Saves the arithmetic average of the instant values*
- ***Min**: Saves the minimum value of the instant samples*
- ***Max**: Saves the maximum value of the instant samples*
- ***Last**: Saves the last instant value (default).*

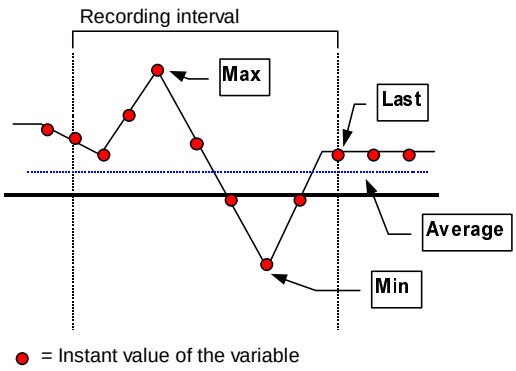

Fig. 6.2.2.1

6.2.3 Acquisition of digital variables

The digital variables are always saved by "forced variation", that is, if in the previous sampling period the value 1 was acquired at least once, then the value 1 will be saved.

6.2.4 Number of variables that can be saved

Any number of variables can be saved, within the following limits:

Total maximum number of variables saved	***100***
Maximum number of digital variables DIG	***64***
Maximum number of slow analogue variables LF	***64***
Maximum number of fast analogue variables HF	***64***

Table 6.2.4.1

For example, if 64 slow analogue variables and no fast analogue variables are used, 36 digital variables can be used.

6.2.5 Recording time

PlantWatch, in the standard configuration (see the following table), can record data for a total of 19 days.

Group		No. of variables	Sampling interval
LF	Low frequency analogue	32	10 minutes
HF	High frequency analogue	4	5 minutes
D	Digital	64	30 seconds

Table 6.2.5.1

When PlantWatch is configured with a number of variables or a sampling time other than the values described in the table, the maximum recording time may also vary significantly.
It will increase as the number of variables decreases or the sampling interval increases, and will decrease in the opposite cases.

All the variables belonging to a group are sampled at the same instant, and thus also share the same maximum recording time.

The sampling intervals for the 3 groups can be set using the PlantWatch Manager program or alternatively from the PlantWatch menu.

The following table shows the recording times achieved according to the variables used:

	Number of variables	Type		Interval	Minimum time (days)
A	32 1 64	LF HF D	low frequency analogue high frequency analogue digital	10 min 600 sec 20 sec	19.5 113 13.5
B	32 4 64	LF HF D	low frequency analogue high frequency analogue digital	10 min 300 sec 30 sec	19.5 22 20.2

Table 6.2.5.2

The minimum time refers to the corresponding group.
The calculation that PlantWatch performs internally to indicate the free space is based on the group with the minimum duration.
*In the example shown in the table, in case **A** the recording time used for the calculation corresponds to the digital group, that is, 13.5 days, in case **B** it corresponds to the low frequency analogue group, that is, 19.5 days.*

For general use, the following diagram is provided, which allows the total recording time to be estimated based on the number of variables used. A sampling interval of 300s is assumed.

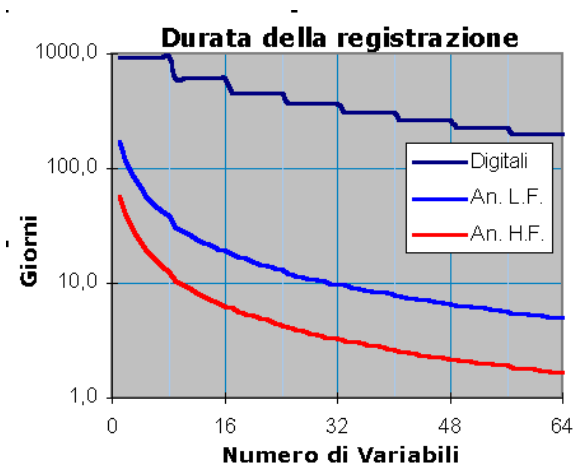

Fig. 6.2.5.1
Total recording time according to the number of variables (sampling interval 300s)

To determine the total sampling time, the following points should also be considered:

- *The areas of memory reserved for the three types of variables are separate, and thus the total recording times are different for each of these.*
  In any case, the free space returned is the lesser of the three.
- *The modification during the operation of the instrument of parameters that affect the operation of the logs, such as the current time or the sampling time, may decrease the total recording time remaining.*

*The easiest way to calculate the recording time is to use the PlantWatch Manager program, which automatically performs the calculation, or alternatively by accessing the screen "*Info → Variables log*" on the PlantWatch device.*

6.3 Keypad commands

Request for free space:
The free space remaining in the logs can be called as follows :
1. *From the main screen, press the (⇓) button repeatedly until the "Info" screen appears*
2. *Choose "Variables logs". The screen "Variables log - free space" will be displayed, indicating the percentage of space remaining.*

*This value is automatically shown as 100% when the data is downloaded by the service centre, printed completely, or alternatively reset by the user from the "*Setup → Maintenance*" menu.*

Deleting the logs:
WARNING ! Before performing this operation, make sure it is effectively necessary, as after deletion the logs cannot be restored.
To delete all the logs:
1. *From the main screen, press the (***Prg***) button for 3 seconds and enter the configuration password (level 3)*
2. *Choose "Maintenance" and then "Delete Variables log". Confirm when requested.*

Note: the delete process may take a few minutes.

6.4 Configuration from the PC

The configuration of the controlled variables is handled by the PlantWatch Manager program. To use this program please refer to the corresponding manual.
N. B.: changing the configuration of the variables or the number and type of instruments configured will delete all the previously saved data logs.

7. PRINTER MANAGEMENT

*PlantWatch can be connected to a parallel printer, using the **PLWPPRD00/ PLWPPRT00** module.*
This module can be connected to any point of the RS485 network that connects PlantWatch to the Carel instruments.

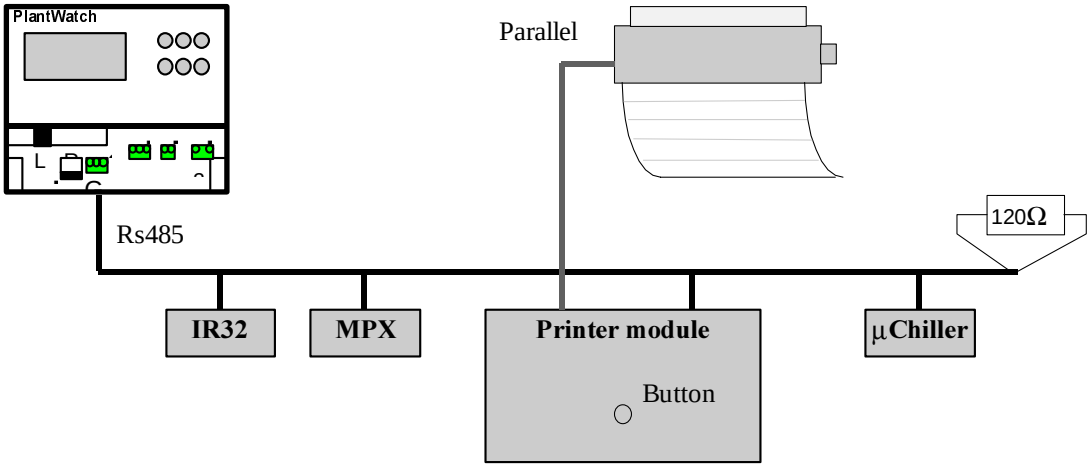

Fig. 7.1

7.1 Print formats

The following types of reports can be printed:

1. *Alarms/events when requested by the operator, with the possibility to select the events required by specifying the start and end time and date*
2. *Alarms/events in real-time, that is, as they occur*
3. *Instant values of the variables featured for the log*
4. *Daily variables log when requested by the operator, with the possibility to select the day and sampling period required*
5. *Grouped daily variables log when requested by the operator, with the possibility to select the day required*
6. *Weekly variables log when requested by the operator, with the possibility to select the week required*

The reports from 3 to 6 may also be generated automatically at the end of the set period or at the required time. In this way, timed reports may represent the complete log, in paper form, of the sampled variables. To guarantee the continuity of the log, the memory full alarm can be enabled so that it is linked to the correct printing of the report (see the list of parameters "Reset free space indicator").

The button on the printer module can also be associated to one of the above reports, activating it when pressed. In this way, the required report can be printed from a position near the printer, without having to access PlantWatch.

Instant value report (type 3):

```
15/09/2000 13:53 Installation name

Current value report

1: LT Cabinet              Probe temperature:          -12.0
1: LT Cabinet              Defrost probe temperature:  -10.0
2: Frozen food island      Probe temperature:          (-17.0)
2: Frozen food island      Defrost probe temperature:  -18.3
3: Frozen food cabinet     Probe temperature:          *****
```

Fig. 7.1.1

On the instant value report, the first line from the top shows the date and time the report was printed, and thus the time the values refer to.
This is followed by the list of variables, with each line being made up of:

Serial address of the instrument: "description of the instrument" "name of the variable": value

If the field value is in brackets (-17.0), it means that at the moment of printing the instrument was off-line, and the value refers to the last reading performed.
If the value field is replaced by asterisks, it means that the variable has never been acquired by the peripheral.

Daily variables log report (type 4):

```
15/09/2000 13:53 Installation name                                Page: 1/4
10/09/2000 1: LT cabinet temperature probe
         0'      10'      20'      30'      40'      50'
---|-------------------------------------------------------------------------
  0|  -----    -----    -----    -----    -----    *****
  1|  -21.3    -21.1    -21.0    -20.7    -20.2    -20.0
  2|  -20.0    -19.9    -19.9    -19.5    -19.7    -19.9
  3|  -20.0    -20.1    -20.5    -20.7    -20.8    -21.0
  4|  -21.3    -21.1    -21.0    -20.7    -20.2    -20.0
  5|  -20.0    -19.9    -19.9    -19.5    -19.7    -19.9
  6|  -20.0    -20.1    -20.5    -20.7    -20.8    -21.0
  7|  -21.3    -21.1    -21.0    -20.7    -20.2    -20.0
  8|  -20.0    -19.9    -19.9    -19.5    -19.7    -19.9
  9|  -20.0    -19.9    -19.9    -19.5    -19.7    -19.9
 10|  -20.0    -19.9    -19.9    -19.5    -19.7    -19.9
 11|  -20.0    -19.9    -19.9    -19.5    -19.7    -19.9
 12|  -20.0    -20.1    -20.5    -20.7    -20.8    -21.0
 13|  -21.3    -21.1    -21.0    -20.7    -20.2    -20.0
 14|  -20.0    -20.1    -20.5    -20.7    -20.8    -21.0
 15|  -21.3    -21.1    -21.0    -20.7    -20.2    -20.0
 16|  -20.0    -20.1    -20.5    -20.7    -20.8    -21.0
 17|  -21.3    -21.1    -21.0    -20.7    -20.2    -20.0
 18|  -20.0    -19.9    -19.9    -19.5    -19.7    -19.9
 19|  -20.0    -19.9    -19.9    -19.5    -19.7    -19.9
 20|  -20.0    -20.1    -20.5    -20.7    -20.8    -21.0
 21|  -21.3    -21.1    -21.0    -20.7    -20.2    -20.0
 22|  -20.0    -20.1    -20.5    -20.7    -20.8    -21.0
 23|  -21.3    -21.1    -21.0    -20.7    -20.2    -20.0
```

Fig. 7.1.2

The daily report shows the values of a determined variable for the entire day, at the specified sampling interval. The values allowed are 10, 15 and 30 minutes.
Each page contains the report for 2 variables.
The dashes "-----" mean that no value was saved at that instant, that is, PlantWatch was off or alternatively the value requested to be printed is no longer present in the log.
*If, on the other hand, the string "*****" is printed, it means that the variable was saved but the value was not acquired by the peripheral, or alternatively the peripheral was off-line.*
The string "?????" indicates the attempt to print variables that are not entered in the log, while "!!!!!" indicates a serious error in the recording of the data.
The sampling period can be set between 10 and 30 min.

Grouped daily variables log report (type 5):

```
15/09/2000 13:53 Installation name                                Page: 1/4
10/09/2000 1: LT cabinet temperature probe
        1:A      1:B      2:A      2:B      2:C     3:A       3:B      4:A
---|-------------------------------------------------------------------------
  0|  -----    -----    -----    -----    -----    *****    -19.9      6.9
  1|  -21.3    -21.1    -21.0    -20.7        1    -20.0      6.7
  2|  -20.0    -19.9    -19.9    -19.5        1    -19.9    -20.1      6.6
  3|  -20.0    -20.1    -20.5    -20.7        1    -21.0    -20.3      6.3
  4|  -21.3    -21.1    -21.0    -20.7        1    -20.0    -20.0      6.0
  5|  -20.0    -19.9    -19.9    -19.5        1    -19.9    -20.1      5.5
  6|  -20.0    -20.1    -20.5    -20.7        0    -21.0    -19.8      5.4
  7|  -21.3    -21.1    -21.0    -20.7        0    -20.0    -19.7      5.1
  8|  -20.0    -19.9    -19.9    -19.5        0    -19.9    -19.6      5.4
  9|  -20.0    -19.9    -19.9    -19.5        1    -19.9    -19.6      5.5
 10|  -20.0    -19.9    -19.9    -19.5        1    -19.9    -19.7      5.4
 11|  -20.0    -19.9    -19.9    -19.5        0    -19.9    -19.8      5.3
 12|  -20.0    -20.1    -20.5    -20.7        0    -21.0    -19.7      5.2
 13|  -21.3    -21.1    -21.0    -20.7        0    -20.0    -19.1      5.1
 14|  -20.0    -20.1    -20.5    -20.7        1    -21.0    -18.8      5.0
 15|  -21.3    -21.1    -21.0    -20.7        1    -20.0    -19.1      5.0
 16|  -20.0    -20.1    -20.5    -20.7        1    -21.0    -18.8      5.1
 17|  -21.3    -21.1    -21.0    -20.7        0    -20.0    -19.1      5.3
 18|  -20.0    -19.9    -19.9    -19.5        0    -19.9    -18.8      4.9
 19|  -20.0    -19.9    -19.9    -19.5        1    -19.9    -20.0      4.5
 20|  -20.0    -20.1    -20.5    -20.7        1    -21.0    -20.1      4.4
 21|  -21.3    -21.1    -21.0    -20.7        0    -20.0    -20.2      4.3
 22|  -20.0    -20.1    -20.5    -20.7        0    -21.0    -20.5      4.2
 23|  -21.3    -21.1    -21.0    -20.7        1    -20.0    -20.9      4.2


Key
 1:A  = LT Cabinet 1 - Probe temperature
 1:B  = LT Cabinet 1 - Defrost probe temperature
 2:A  = Frozen food island 1 - Probe temperature
 2:B  = Frozen food island 1 - Defrost probe temperature
 2:C  = Frozen food island 1 - compressor status
 3:A  = Frozen food cabinet 1 - Probe temperature
 3:B  = Frozen food cabinet 1 - Evaporator temperature
 4:A  = Frozen food cabinet 2 - Probe temperature
```

Fig. 7.1.3

The grouped daily report shows the values of a series of variables on the same page for the entire day, at a set sampling interval of 1 hour; each page on the report can print up to 8 variables.
The values of the variables are grouped into columns, each column represents the temperature trend for the day at 1 hour intervals.
The symbols are the same as described for report 4 above.

Weekly variables log report (type 6):

15/09/2000 9:00 Installation name Page: 1/4
11/09/2000 1: LT cabinet temperature probe

	Mon	Tue	Wed	Thu	Fri	Sat	Sun
0|	-21.7	-23.4	-20.3	-20.0	-19.4	-18.7	-18.7
1|	-21.3	-21.1	-21.0	-20.7	-20.2	-20.0	-19.7
2|	-20.0	-19.9	-19.9	-19.5	-19.7	-19.9	-19.1
3|	-20.0	-20.1	-20.5	-20.7	-20.8	-21.0	-18.7
4|	-21.3	-21.1	-21.0	-20.7	-20.2	-20.0	-18.9
5|	-20.0	-19.9	-19.9	-19.5	-19.7	-19.9	-19.0
6|	-20.0	-20.1	-20.5	-20.7	-20.8	-21.0	-19.1
7|	-21.3	-21.1	-21.0	-20.7	-20.2	-20.0	-19.2
8|	-20.0	-19.9	-19.9	-19.5	-19.7	-19.9	-19.3
9|	-20.0	-19.9	-19.9	-19.5	-19.7	-19.9	-19.5
10|	-20.0	-19.9	-19.9	-19.5	-19.7	-19.9	-19.7
11|	-20.0	-19.9	-19.9	-19.5	-19.7	-19.9	-19.9
12|	-20.0	-20.1	-20.5	-20.7	-20.8	-21.0	-20.0
13|	-21.3	-21.1	-21.0	-20.7	-20.2	-20.0	-20.1
14|	-20.0	-20.1	-20.5	-20.7	-20.8	-21.0	-19.9
15|	-21.3	-21.1	-21.0	-20.7	-20.2	-20.0	-19.7
16|	-20.0	-20.1	-20.5	-20.7	-20.8	-21.0	-19.1
17|	-21.3	-21.1	-21.0	-20.7	-20.2	-20.0	-19.2
18|	-20.0	-19.9	-19.9	-19.5	-19.7	-19.9	-19.3
19|	-20.0	-19.9	-19.9	-19.5	-19.7	-19.9	-19.0
20|	-20.0	-20.1	-20.5	-20.7	-20.8	-21.0	-19.7
21|	-21.3	-21.1	-21.0	-20.7	-20.2	-20.0	-20.0
22|	-20.0	-20.1	-20.5	-20.7	-20.8	-21.0	-20.5
23|	-21.3	-21.1	-21.0	-20.7	-20.2	-20.0	-20.6

Fig. 7.1.4

The weekly report shows the value of an individual variable for 7 days, at a set sampling interval of 1 hour; each page contains the report for 2 variables.
The symbols are the same as described for report 4 above.

7.2 Automatic printing

PlantWatch can automatically print the events, the instant value report, the daily log, the grouped daily log and the weekly log.
*The **events report** is printed in real-time; at the moment the event occurs the line describing the event is sent to the printer, and thus the list produced appears in increasing chronological order.*
If a laser printer is used, the sheet will not be printed until a page is completed (66 lines), or unless the operator presses the printer page feed button.
The request to print a report sent by the operator or activated automatically at a set time, in the case where events have already been printed, is preceded by a page break, in order to align the report at the beginning of the sheet.
*The set time printing of the **instant value report** is performed at the interval specified, at a time that depends on the interval itself.*

Set interval	***Print time***
15 minutes	*at 00,15,30,45 minutes each hour*
30 minutes	*at 00 and 30 minutes each hour*
45 minutes	*at 00:00, 00:45, 01:30, 2:15, etc...*
1 hour	*at 00:00, 01:00, etc...*
1.5 hours	*at 00:00, 01:30, 03:00, etc...*
2 hours	*at 00:00, 02:00, 04:00, etc...*
4 hours	*at 00:00, 04:00, 08:00, etc...*
8 hours	*at 00:00, 08:00, 16:00.*
12 hours	*at 00:00, 12:00*
24 hours	*at 00:00*

Table 7.2.1

The set time printing of the daily log refers to the day before the current day, and is performed at the time specified and at the display interval specified in the set-up. The values allowed are 10, 15 and 30 minutes.
*The set time printing of the **grouped** daily log refers to the day before the current day and is performed at the time specified and at a set display interval of 1 hour.*
*The set time printing of the **weekly** log refers to the week before the day the report is printed, and is performed at the time and on the day specified in the set-up. Make sure that duration of the log is longer than 1 week.*

7.3 Cancel a report being printed or realign the paper

*If a print procedure needs to be stopped, answer (YES) to the "**Cancel print job?**" command in the corresponding screen on the menu main. This operation always realigns the paper, even if there are no reports being printed, and should thus be performed after having manually fed the paper. The cancelling of a report being printed and the feeding of the page can also be performed directly on the printer module, by holding the corresponding button for more than 4 seconds.*

8. REMOTE SIGNALLING

The remote signals (faxes, SMS messages, calls to the service centre and activation of the relay) are only sent when at least one alarm remains active for a time longer than the delay set for the corresponding category (see Chap. Alarm management).

8.1 FAX transmission

***Warning**: to send a fax with the GSM modem, the SIM card must be enabled for this use. In case of doubt, contact the GSM telephone operator that issued the SIM.*

8.1.1 Creating the fax

The fax is transmitted only when the remote signalling condition exists and the following conditions are satisfied:

- *at least ½ hour has elapsed since the transmission of the previous fax*
- *at least 1 minute has elapsed without remote-signal alarms being activated, or alternatively there are more than 32 active*

This type of filtering prevents repeated faxes being sent containing redundant information.

Example of a fax:

```
PLANTWATCH FAX ------------------>Date/time: 9/06/2000  8:32
--------------------                From:      Shopping centre ID:126
                                    To:        0413434344
Alarm report

09/06/2000 8:19 <!> <*> 0:10 3: Meat cabinet    Off-line
09/06/2000 8:18 <!> <*> 1:12 1: Veg. display    High temperature
09/06/2000 8:17              2: Fruit display   Off-line
09/06/2000 8:10 <!>          3: Meat cabinet    Off-line
08/06/2000 18:08              1: Veg. display    low temperature
07/06/2000 10:08              1: Veg. display    Off-line
07/06/2000 10:00             PW: Restart
<!>=Active alarms <*>=Serious alarms, duration (hh:mm)

Current value report
1 Veg. display  Evap temperature :    -22.1
2 Fruit display Evap temperature :    -15.8
3 Meat cabinet  Evap temperature :    (-10.5) Off-line
```

Fig. 8.1.1.1

The list of alarms is compiled in reverse chronological order, from the more recent to the oldest, copying from the PlantWatch internal log only the start alarm events.
The signal-only events and end alarm events are ignored, except for the PlantWatch reset.
The alarms that are still active at the moment the fax is transmitted are printed preceded by the symbol <!>, while those which, due to their seriousness or duration over the set delay time, have brought about the sending of the fax, that is, have become remote-signal alarms, are also preceded by the symbol <>, and this symbol is followed by a number that indicates the duration of the alarm in hours and minutes; if the alarm has been active for more than 18 hours, the indication ">18" is printed.*
If after the activation of the remote signalling condition the alarms that caused such condition are over, the fax will still be sent, without indicating any active alarms.
A maximum list of 35 alarms is sent, to leave space for the report of the variable values read at the moment the fax is sent.
The heading of the fax includes the date and time of transmission, the name of the installation, the installation code and the telephone number of the fax recipient.
The installation code is the number used by the data processing centre (supervisor) to identify the PlantWatch system that has performed the call.

8.1.2 Call management

The fax calls are made to the numbers entered during configuration. The logic used to manage the calls can be configured; this can be forced *or* conditional. *In the former case, the fax is always sent to all the numbers entered, while in the latter case, the fax is sent to the first recipient, A, B or C, that correctly receives the fax. See the corresponding parameters on the screen* m5.

Before a call is considered as having failed, six attempts are performed in the following sequence:

Attempt	**pause before dialling the same number again**
1	
2	20 seconds from the 1st
3	1 minute from the 2nd
4	1 minute from the 3rd
5	2 minutes from the 4th
6	4 minutes from the 5th

Table 8.1.2.1

Calls to any other fax number or data centre are made during the delay between one attempt and the next.
If the fax cannot be sent, a failed fax transmission *event is saved, followed by one of the following error codes.*

Error code	**Meaning**
3	Modem initialising error
7	Timeout: no response from the device called
8	Modem error: "no dialtone", "Busy", "No answer", "dialing disabled", "no carrier", "error"
other	internal codes: request for information

Table 8.1.2.2

8.2 Send SMS

The SMS message is sent as soon as the remote-signal alarm condition is activated. Each individual alarm event produces an SMS message.
The transmission of the SMS to the 3 recipients is always forced, in that, unlike the fax, where the receipt of the message by a determined number can be confirmed, for the SMS this is impossible, as the confirmation always comes from the service centre, and it makes no sense to manage calls to alternative numbers.

8.2.1 Send SMS using GSM modem

The GSM modem immediately sends the message as soon as a remote signal alarm condition occurs.
The send is considered as having been performed if the network operator's server confirms reception; in the event no confirmation is received, further 5 attempts are made to send the message, at 30-second intervals.
If the message can not be sent, a failed SMS transmission *event is generated.*

8.2.2 Send SMS using the telephone line (PSTN) modem

The SMS can be also sent using an internal or external PSTN modem.
In this case, the messages are sent by connecting to a service centre that effectively transfers the message to the GSM network.
PlantWatch supports the TAP and UCP protocols, which are the most commonly used transmission standards internationally. These standards also allow connection to service centres for sending text messages to pagers.
The message is transmitted in two phases: in the first phase, the call is made to the service centre, the telephone number of which needs to be configured using the screen ***m8****, while in the second phase the message is transmitted to the server.*
The SMS message is considered as having been delivered when the server sends the confirmation code. The effective receipt of the message may take a number of hours, and will only occur if the operator of the centre has stipulated a roaming agreement with the network operator of the recipient of the message. If this is not the case, the message may be confirmed by the centre even if the operator has not sent it to the recipient.

If the send fails, PlantWatch makes repeated attempts to send the message, according to the times described in the paragraph Fax Transmission - Call Management ***Table 8.1.2.1.*** *Calls to fax numbers or data processing centre are made during the delay between one attempt and the next.*
The identifier of the message received on the cellular phone depends on the type of protocol used to connect to the service centre. In the case of the UCP protocol, PlantWatch sets this value as numeric code of the installation; see the corresponding parameter on screen g1. *In the case of the TAP protocol, the value of the identifier can not be set, and it therefore takes the standard code set by the service provider.*

The mobile phone numbers of the recipients should be entered with or without the international access code, according to the requirements of the operator.
When the configuration requires the UCP protocol, the international access code "+" is translated by the PlantWatch software into the sequence "00", as the standard only allows numeric characters; in the other cases, the numbers must be entered in the format "0039....." rather than "+39....", unless otherwise specified by the operator.

8.2.3 Format of the SMS message

The SMS messages are received by the cellular phone accompanied by the date and time of the message. The latter refers to the moment when the network operator's server receives the message.
The effective delivery of the message to the recipient's phone depends on the traffic on the network (it may even be delayed by a number of hours).
The format of the messages is the following:

PW: "Installation name" "installation code" ("Number active alarms"!) →
"Date and time alarm started" ["Duration of alarm hh:mm"]
"Alarm description"

Table 8.2.3.1

Item	***Description***
Installation name	*Alphanumeric name of the installation*
Installation code	*Numeric identifier (address)*
Number active alarms	*As in the fax, this is a counter that indicates the number of active alarms at the moment the message is sent*
Date time alarm started	*Instant at which the alarm occurred*
Duration of alarm	*Duration of the alarm expressed in the format hh:mm: if the duration exceeds 18 hours, the message [>18h] is shown*
Alarm description	*The description of the alarm is in the same format used on the display and in the faxes, that is:* • *in the case of an alarm generated by a peripheral* *Alarm description* = nn: "peripheral name" "alarm" *Where:* nn *physical address of the peripheral* peripheral name *name assigned to the peripheral by the user during configuration* alarm *description of the alarm* • *in the case of an internal event/alarm* *PW: "alarm /event description"*

Table 8.2.3.2

8.3 Call to the data centre

The calls to the data centre are made by PlantWatch when the remote signalling conditions exist (see Chap. Alarm management*). The purpose of the call is to transfer the updated alarm log to the centre.*
PlantWatch also calls the centre to download the variables log.
The latter call is made when the remaining space for saving the variables log falls below 30% of the space available. If the call and the download operation are successful, PlantWatch considers the free space as being 100%.
If PlantWatch cannot perform the download before the space falls below 20%, a serious alarm is generated, and this is signalled in the enabled mode; a second alarm notifies the user when the space reaches zero and the data not yet stored will be irreversibly lost.
The variable that indicates the space occupied can only be reset if the password sent by the remote PC has the required level of authorisation. This ensures that any other computers making the call can download the log resident in PlantWatch without compromising the continuity of the procedures for saving the logs to the centre's PC.
All calls for other reasons from PlantWatch to the authorised centre and vice-versa include the downloading of the data and the setting of the free space to 100%.
The attempts at transmission in the case of an engaged line are managed as shown in ***Table 8.1.2.1****, the error codes are shown in* ***Table 8.1.2.2.***

8.4 Activation of the alarm relays

The relay is activated by PlantWatch when the remote signalling condition exists (see par. 5). The configuration parameters allow the relay activation logic to be modified between normally energised and normally de-energised. It is also possible to set the relay activation time for single-location operation (timed activation) or alternatively choose permanent activation.
Pressing the (🔔) button for more than 3 seconds deactivates the alarm relay.

9. PARAMETERS AND CONFIGURATION PROCEDURE

9.1 Parameter programming

*The parameter programming procedure is accessed by pressing the (**Prg**)button for 3 seconds. The various levels of parameters are accessed by entering different passwords. The parameters are grouped into screens according to their function and importance. The display of the parameters depends on the level of the password entered; the highest level password, level 3, allows both the parameters and the passwords to be modified, while the parameters in level 1 guarantee maximum security and user friendliness for less expert users.*
The enabling or disabling of the display of the various parameters is handled according to screen, and so the screens belonging to higher levels than that of the password entered will not be displayed.

Level	***Description***	***Code***
1	*Maintenance*	*Man*
2	*User configuration*	*Cfg1*
3	*Installer configuration*	*Cfg2*

Table 9.1.1

The configuration screens can be exited as follows:

Exit and save the changes: *press the (**Prg**) button and answering* Yes *to the question "**Save and exit?**". In this case, the modifications will be saved to the flash memory.*

Parameter update
Save and exit setup?
No

Fig. 9.1.1

Exit and ignore changes: *press the (**Esc**) button for 3 seconds. This returns directly to the main display screen. The same occurs after 3 minutes of inactivity (no button pressed).*

Warning: any modifications to the configuration corresponding to the network of the connected peripherals, number of peripherals and type of peripherals (but not the names), automatically deletes the variables log. As a result, if the data saved needs to be stored, download or print the variables log before making the required modifications.

9.2 List of parameters

The following list shows all the PlantWatch operating parameters; those marked with the code PC in the screen code column can only be modified using the PlantWatch Manager *configuration program.*

Screen code	*Description*	*Level*	*Type*	*Default*	*Available choices*
a1	*Buzzer activation time*	*3*	*minutes*	*Continuous*	*disabled* *1-20min* *continuous*
a1	*Alarm relay activation time*	*3*	*seconds*	*Continuous*	*disabled* *1 sec* *20 sec* *continuous*
a1	*Activation of the printer board alarm relay (Prn relay)*	*3*	*flag*	*yes*	
a2	*Alarm relay logic*	*3*	*flag*	*normally de-energised*	
a2	*Function of relay RL1*	*3*	*flag*	*reset modem*	*Reset modem* *Serious alarms*
a3	*Sampling period, low frequency LF analogue*	*3*	*minutes*	*15 min*	*1 min*

Screen code	Description	Level	Type	Default	Available choices
	variables				480 min
a3	Sampling period, high frequency HF analogue variables	3	seconds	30 sec	1 sec 1800 sec
a3	Sampling period, digital variables	3	seconds	20 sec	5 sec 1800 sec
a4	Variables log: log full alarm	3	flag	Enabled	Enabled Disabled
a5	Variables log: reset free space indicator	2	flag	Print report	Serial download Print report
g1	Installation name	3	string	PlantWatch	
g1	Installation code	3		1	1-32000
g2	Type of unit for instrument configuration	3	flags		Ir32, Ir32c...
g2	unit category X 32	3	flags	-	List of names
g2	unit description X 32	3	flags	-	List of names
g2	unit progressive no. X 32	3		1	1÷32
g3	self-configuration mode activation	3	flag		
g4	Baud rate used on RS485 serial line to peripherals	3	Baud	19200	1200÷19200
g5	level 1 access password	3		0001	0÷65535
g5	level 1 user name	3	string	"User1"	
g5	level 2 access password	3		0002	0÷65535
g5	level 2 user name	3	string	"User2"	
g5	level 3 access password	3		0003	0÷65535
g5	level 3 user name	3	string	"User3"	
g6	status screen rotation activation	1	flag	Disabled	Enabled Disabled
L1	Language selection	2	flags	English	English Italian German French Spanish
m1	Serial port mode, internal modem/external modem/direct serial connection	3	flags	internal modem	No modem internal modem external modem
m1	Number dialling pulse/tone	3	flag	Tone	Tone / Pulse
m1	Number or rings for automatic answer	3	number	1	1÷99 99=disabled
m1	Modem type	3	flags	PSTN	PSTN GSM Type 1 GSM Type 2
m2	data processing centre telephone number	2	string	"0..."	
m2	enable data processing centre telephone number	2	flags	Disabled	Enabled Disabled
m3	Data processing centre access password	3	number	00004	
m3	Data processing centre access user name	3	string	"RemoteUser"	
m4	Enable call to data processing centre to send alarms	3	flag	Disabled	Enabled Disabled
m4	Enable call to data processing centre to download variables log	3	flag	Disabled	Enabled Disabled
m5	fax number 1	2	string	"0..."	
m5	fax number 2	2	string	"0.."	
m5	fax number 3	2	string	"0.."	

Screen code	Description	Level	Type	Default	Available choices
m5	enable fax number 1	2	Assint	Disabled	-, A
m5	enable or force fax number 2	2	Assint	Disabled	-,b,B
m5	enable or force fax number 3	2	Assint	Disabled	-,c,C
m7	PIN for GSM modem	3	string		
m8	Enable SMS transmission	2	flag	Disabled	Enabled Disabled
m8	Telephone number of the network operator's SMS service centre	3	string		
m9	Password for connection to TAP SMS service centre	2	string		
m9	Baudrate for connection to SMS service centre	2	Baud	19200	1200-38400
m9	Type of protocol for connection to SMS service centre	2	flags	UCP	UCP-TAP
m9	Parity for connection to SMS service centre	2	flags	None	None Odd Even
m9	Number of bits for connection to SMS service centre	2	flag	8	7-8
m10	Cellphone number of recipient A	2	string	"0..."	
m10	Cellphone number of recipient B	2	string	"0..."	
m10	Cellphone number of recipient C	2	string	"0..."	
m10	Enable number of recipient A	2	flag	Disabled	-, A
m10	Enable number of recipient B	2	flag	Disabled	-, B
m10	Enable number of recipient C	2	flag	Disabled	-, C
ma1	clock set-up	1	data-hour		
ma2	Delete events/alarms log command	3	flag		
ma2	Delete variables log command	3	flag		
ma3	Reset variables log free space indicator command	2	flag		
p1	Presence of printer board	2	flag	Disabled	Disabled Enabled
p1	Printer board button function	2	flags	Values rep.	Disabled Values rep. Daily rep. Gr. daily rep. Weekly rep.
p1	daily log print interval from printer board button	2	flags	15 min	10min 15 min 30 min
p2	enable real-time event log print	2	flag	Disabled	Disabled Enabled
p2	enable and frequency of periodical instant values report	2	flags	Disabled	------- 15 min 30 min 45 min 1 hour 1.5 hours 2 hours 4 hours 8 hours 12 hours

Screen code	Description	Level	Type	Default	Available choices
					24 hours
p3	enable and interval of daily log report	2	flags	15 min	---- 10min 15min 30 min
p3	daily log print time	2	hours:min	12:00	
p4	enable grouped daily log report	2	flag	Disabled	Disabled Enabled
p5	Enable and day of weekly log report	2	flag	Disabled	------ Sun. Mon .... Sat
p5	Weekly log print time	2	hours:min	12:00	
PC	remote signal delay for long delayed alarms	PC		30 min	1 min - 18 h
PC	remote signal delay for short delayed alarms	PC		3 min	1 min - 18 h
PC	peripheral disconnected alarm priority (instant/fast/slow) for remote signalling	PC	flags	Short delayed	
PC	printer timeout alarm priority (instant/fast/slow) for remote signalling	PC	flags	Short delayed	
PC	Alarm auto-reset time after user intervention for maintenance	PC	hours	48	1-200
PC	Analogue variable sampling mode maximum/minimum/average/instant X no. variables	PC		instant	
PC	Frequency of connection to service centre for download	PC	days	0	0 = disabled 1 ÷ 14 days
PC	External modem initialisation string (data mode)	PC	string	UsRob	
PC	External fax initialisation string (fax mode)	PC	string	UsRob	
PC	Non-standard languages	PC			
Mplant Modes	Modification of instrument parameters	PC			

Table 9.2.1

9.3 Description of the parameters

The following figures show the main selection screens.

Setup &
Maintenance menu
Password: 00000

User: User3	>General
>Maintenance	>Fax-modem
>Parameter	>Printer
>Language	>Alarm/History

Fig. 9.3.1

9.3.1 Maintenance

9.3.1.1 Clock set-up

ma1
Clock setup
Date: 9/04/2001
Time: 16:44

Fig. 9.3.1.1.1

The fields allow the time and date of the internal clock to be set. The data is effectively updated when exiting the screen; no confirmation is required. At the moment of the update the seconds are set to zero.

9.3.1.2 Delete event log

ma2
ma2
Events log erase
Confirm: No

Fig. 9.3.1.2.1

N. B.: Confirming the corresponding field completely deletes the event/alarm log.

9.3.1.3 Delete variables log

ma3
Variables log erase
Confirm: No

Fig. 9.3.1.3.1

N. B.: Confirming the corresponding field completely deletes the variables log.

9.3.1.4 Reset free space indicator

ma4
Variables log Free space meter Reset? No Free space: 93%

Fig. 9.3.1.4.1

N. B.: Confirming the corresponding field resets the free space indicator.

After this operation the free space will be considered as 100%. In this way, the memory full alarms are also reset, while the data saved remains available for printing or downloading.

9.3.2 Parameters > General

g1	g2	g3	g4
Site name: Installation UT1 Plant address: 1	Unit setup Addr: 1 IR32C Wall unit Vegetables 1	Unit autosetup Start? No ----------	RS 485 baud rate 19200 Baud
g5	g6		
Edit passwords 1: 00001 User1 2: 00002 User2 3: 00003 User3	Status masks rollup: Disabled		

Fig. 9.3.2.1

9.3.2.1 Installation name

This is a string of 20 characters that identifies the PlantWatch in text form.
This name appears on all the reports, on the faxes, on the main screen of the PlantWatch, and is also sent to the data processing centre during each connection.

9.3.2.2 Installation code

The installation code is a number that uniquely identifies the installation; it is used, together with the installation name, by the software on the computer in the data processing centre to identify the incoming calls.
This number must coincide with the address of the node configured on the supervisor.

9.3.2.3 Unit configuration

This screen is used to configure the units in the RS485 network.

Example

Unit setup Addr: add Type of unit Category Description NN

Unit setup Addr: 1 IR32C NT CABINET Vegetables 1

Fig. 9.3.2.3.1

*- The **Address** field represents the physical address of the instrument, when changed, the other fields display the current setting of the selected instrument.*

*- The **Type of unit** field is the more important of these, and determines the recognition of the unit and the correct management of the alarms. The unit types that can be selected are in fact the "templates" loaded in the PlantWatch flash memory (maximum 32).*
When PlantWatch leaves the factory, it contains all the types of Carel instruments that can be connected, therefore there is one template for each instrument.

Using the "PlantWatch manager" program, these templates can be customised, and new ones created, according to the specific application (see Chap. Configuring PlantWatch using PlantWatch Manager).
The type of unit must always coincide with the model of Carel instrument effectively connected, if not, an alarm will be generated.
*The **Category**, **Description** and **number NN** fields represent the user name of the machine (refrigerated cabinet, cold room, air-conditioner, chiller, etc....), that will be referred to each time PlantWatch has to generate a message relating to that machine.*
PlantWatch contains a pre-set series of names which, when suitably combined, generate a sufficiently clear unit description.
In any case, the PlantWatch Manager *configuration program allows specific names to be created.*
WARNING: modifying the installation's configuration data corresponding to the type, the address and the number of the peripherals connected leads to, for reasons of data coherence, the deleting of the variable log; therefore, all the logs saved must first be downloaded or printed.

9.3.2.4 Unit automatic configuration

This screen activates the unit self-configuration function. This procedure is very useful when configuring PlantWatch with the units already connected and operating.
It offers the possibility to automatically set the Type of unit *field in the previous screen based on the information received from the peripherals themselves.*
It is then up to the operator to set, on the previous screen, the names of the units (category, description). This procedure, during the scan phase, also searches for the presence of the printer module (see related configuration screens).
If, using the PlantWatch Manager program, more than one template *has been defined to describe the same unit, the procedure automatically selects the first one found.*
If there is no template *in the memory corresponding to the instruments installed, the character '?' will appear to indicate the addresses of the instruments that are not recognised.*

9.3.2.5 RS485 baud rate

This parameter configures the speed that PlantWatch uses on the RS485 serial line; the standard baud rate is 19200, nonetheless, some instruments only use 9600 baud, and thus it is necessary to adjust PlantWatch to this value.

Warning: the same serial line cannot be used for instruments with different baud-rates.

9.3.2.6 Change password

This screen allows a password *and* username *to be set for the 3 levels of access envisaged in the PlantWatch user interface.*
This screen can only be accessed by the level 3 user.

Edit password
1: 00001 User1
2: 00002 User2
3: 00003 User3

Fig. 9.3.2.6.1

The password *fields are numeric only and limited to a maximum value of 65536, while the* user name *fields are alphanumeric, with a maximum length of 11 characters.*

9.3.2.7 Status screen rotation

Enabling this parameter sets the automatic rotation of the screens, see paragraph "Automatic rotation of status screens".

9.3.3 Parameters > FAX-Modem

m1	m2	m3	m4
Modem setup External modem Dial mode: Tone Type: PSTN	Data service center Call enable: No 0000000000 Call test: Off	Data service center Edit password Pass: User: 00004 RemoteUser	Data service center Dial service for: Alarms notific.:No Logs download: No
m5	**m6**	**m7**	**m8**
Fax service setup A:04371234567 b:0123456789 c:0123456789	Fax call test Fax service: A Call test: Off	GSM modem setup Pin: 3241	GSM Direct SMS SMS TX Enable Yes SMS Service center +393492000200
m9	**m10**	**m11**	
PSTN SMS setup Passw: Baud: 19200 UCP Parity: None Bit: 8	SMS recipients A:00393475272983 B:00393484427822 C:0039123456002	SMS send test:: SMS recipient :A No	

Fig. 9.3.3.1

9.3.3.1 Modem configuration

The modem configuration screen includes the fields for selecting the port used to manage the modem, selecting the dialling mode, pulse or tone, the number of rings for automatic answer and configuring the type of modem.
The options used are described in the following table:

Option	Port used	Function	Note
No modem	RS232 serial	Direct supervisor connection in RS232 or for setup via serial	
External modem	RS232 serial	3Com-UsRobotics external modem	other model of modem can be used, modifying the initialisation strings using "PlantWatch manager"
Internal modem	Internal serial	This selection is operative only if the model of PlantWatch is PLW00M0000, for the other models, it is the same as selecting "External modem"	

Tab. 9.3.3.1.1

For each selection, the line rate is fixed and equal to 115,200 baud, no parity, 2 stop bits.
The possible options for the type of modem are PSTN or GSM Type 1 and GSM Type 2.
PSTN is for modems using dial-up lines, while GSM is for cellphone modems.
Currently the approved GSM modems are Wavecom WMOD2B, Siemens M20T, FALCOM A2 and ETM 9000.
The settings to be performed for the modems listed above are:

For the modem listed above the options are the following:

Option	Modem model	Baudrate
Type 1	Falcom A2 Wavecom WMOD2B ETM 9000	9600
Type 2	Siemens M20T	19200

Tab. 9.3.3.1.2

The PSTN modems used must conform to the Hayes standard (AT.. commands) and support at least the V.34 (33600 baud) standard.

*The pre-set model is Us-Robotics, other brands and models can be used by modifying the initialisation commands for fax and data using "*PlantWatch Manager*".*

When the modem configured is a PSTN modem, the ***Ring: n*** *field is used to select the number of rings that PlantWatch waits for before answering an incoming call. While the field allows values from 1 to 99 to be entered, it is not recommended to exceed 5-6 rings, so as to not exceed the limits set by the telephone operator. To set PlantWatch to not answer any calls, set the value to 99, in this case PlantWatch will only be able to make outgoing calls and not receive incoming calls to read data or modify the configuration.*

9.3.3.2 Data processing centre configuration

The parameters that need to be set are the overall enabling of the calls, and the telephone number of the centre.
The ***Test call*** *field allows test calls to be made.*
Before making such calls, the configuration must be saved so that the parameters displayed coincide with those that are operative.
The calls to the centre can be made to notify alarms and to download the log. Both functions can be enabled separately.
The "Password" and "User" fields must be set to coincide with those of the MasterPlant or the PlantWatch Manager *configuration program.*
The right to access these are initially as default set to the maximum: all remote operations are accepted. Subsequently, the user may restrict the allowed actions using the configuration program.

9.3.3.3 Fax configuration

```
Fax service setup
A:04371234567
b:0123456789
c:0123456789
```

Fig. 9.3.3.3.1

The parameters that need to be set are the enabling of the calls and the fax numbers to be called.
Depending on the letter that appears in the left-hand field, the calls to the second (B) and third (C) fax number may be conditioned by the outcome of the transmission to the previous number, that is, C by B and B by A

Indication on the left	***Action***
-	*call disabled*
A B C (capital letter)	*call enabled in forced mode to numbers A, B, C*
b c (small letter)	*call enabled but conditioned by the outcome of the calls to numbers A or B*

Tab. 9.3.3.3.1

The following screen

```
Fax call test
Fax service:   A
Call test.: Off
```

Fig. 9.3.3.3.2

allows a test call to be made to one of the fax recipients, A, B or C, after the configuration has been saved so that the parameters displayed coincide with those that are operative.

9.3.3.4 GSM modem configuration

If the modem connected is a GSM cellphone modem, the PIN (Personal Identity Number) can be configured.
The PIN is sent to the modem only if the SIM installed requires this, and so, for boards with the PIN disabled, this parameter may have any value.
If this parameter is set incorrectly, PlantWatch sends the PIN only once and then generates the "PIN Error" alarm event.
In the event where PlantWatch is shut-down and re-started, the PIN will be sent again: only 3 attempts are allowed, after which the SIM will need to be removed and, using a cellphone, unlocked using the PUK.

9.3.3.5 SMS configuration

GSM modem
To enable the sending of SMS messages using a cellphone modem, the number of the service centre of the mobile network operator supplying the SIM card must be entered. This number must be preceded by the international access code (+39 for Italy). If this number is omitted (spaces only), it will not be sent to the modem, and the number present in the SIM will be used, if already entered or pre-configured by the network operator.

PSTN modem
To allow the transmission of SMS messages by a PSTN modem, the number of the service centre of a mobile network operator that supports the UCP/TAP standard must be entered.
This number is dialled by the modem to connect to the centre. Also see the paragraph Send SMS using the fixed telephone line (PSTN) modem.
The ***screen m9*** *must be accessed to set the parameters Password (**Passw**), Baud, Parity, Bits and protocol (UCP/TAP), as recommended by the service provider. In particular, the Parity, Bits and protocol values must be followed, as if wrong no connection will be possible.*
*The Password is only used by the TAP protocol, it should be entered only if the service centre allows password-protected login, and should normally be left blank. The sending of the SMS messages can also be enabled or disabled using the corresponding flag on screen **m8**.*

9.3.3.6 SMS recipients

Up to 3 numbers can be entered as recipients of the SMS messages (A, B and C); next to each number is a flag to enable or disable the send. The SMS is sent at the same time and in unconditioned mode to all the enabled numbers. The messages are considered as having been transmitted when the network operator accepts the message; the effective delivery to the recipient's cellphone then depends on the operator.
In addition, there is a screen for sending test messages to the selected recipient; before making such calls, the configuration must be saved so that the parameters displayed coincide with those that are operative.

9.3.4 Parameters > Printer

p1	*p2*	*p3*	*p4*	*p5*
Printer: Disabled *Key funct:* *Values report* *Logs int.: 10min*	*Autom. print* *Print events: No* *Val.rep.frq: 15min*	*Autom. print* *Daily logs report* *Logs interv: 10min* *Print time: 9:08*	*Autom. print* *Daily grouped report* *Enabled*	*Autom. print* *Weekly logs report* *Print day: Tue* *Print time: 11:00*

Fig. 9.3.4.1

9.3.4.1 Printer configuration

The initial screen p1 contains the enabling flag, and the function to attribute to the button on the optional PLW0PPRT00/ PLW0PPRD00 module.
If the enabling flag is deactivated all the print functions will be disabled, and no alarm will be generated relating to the printer or the optional module.
The button on the printer module can have the following functions:

- *no action (**Disabled**)*
- *immediately print instant value report (**Value report**)*
- *print daily log report (**Daily log report**), in this case the parameter **Log interval** on the same screen allows the sampling interval of the report to be set (see paragraph "Automatic printing")*
- *print grouped daily log report (**Grouped daily report**), in this case the parameter **Log interval** has no effect, as the interval is set to 1 hour.*
- *print weekly log report (**Weekly log report**), in this case the parameter **Log interval** has no effect, as the interval is set to 1 hour.*

The daily prints generated by pressing the button correspond to the current day, and therefore start from the time 00.00 until the current instant.
The weekly prints relate to the week prior to the day of printing, and thus do not include the current day.
Pressing the button for 4 seconds cancels the print in progress and forces a page feed.

9.3.4.2 Automatic printing

The two configuration screens for automatic printing and set time printing allow the following functions to be enabled and configured:

1. *printing of the events in real-time (**Print events**)*
2. *enabling and frequency of the value report (**Frq. val. report.**)*
3. *enabling of the daily log report (**Daily log report**), print time and setting the sampling interval for the report (see paragraph "Automatic printing")*
4. *enabling of the grouped daily log report (**Grouped daily report**). The parameter that establishes the time of the print is the same for the previous print.*
5. *enabling of the weekly log report (**Weekly log report**). The parameters associated to this function are the day of the week and the print time.*

In cases 2, 3 and 5, disabling is represented by the selection "--------".

9.3.5 Parameters > Alarms/logs

a1	a2	a3	a4	a5
Alarms signalling i Buzzer: Disabled Rele time: Steady Prn Rele: Enabled	Alarm rele logic: Norm energized Sec. relay function: Severe alarms	Sampling time Dig. variables: 30s HF anl.variab.: 60s LF anl.variab.: 5m	Variables log Variables log full memory notify event: Enabled	Variables log Reset free space meter by: Printer reports

Tab. 9.3.5.1

9.3.5.1 Buzzer activation time or disabling

Set the activation time for the buzzer in the event of an alarm; the following options are available:

Disabled	*always OFF*
1, 2, 5, 10, 15 and 20 minutes	*buzzer active for the specified time or alternatively until manually reset using the (🔔) button*
Continuous	*buzzer active until manually reset using the (🔔) button*

Tab. 9.3.5.1.1

When the alarm condition is no longer present, the buzzer is always disabled.

9.3.5.2 Alarm relay (RL2) activation time

Sets the activation time for alarm relay (RL2); the following options are available:

Disabled	*relay always disabled*
1, 2, 5, 10, 15 and 20 minutes	*relay active for the specified time or alternatively until manually reset by pressing the (🔔) button for 3 secs*
Continuous	*relay active until manually reset by pressing the (🔔) button for 3 secs*

Tab. 9.3.5.2.1

When the alarm condition is no longer present, the relay is always disabled.

9.3.5.3 Printer board alarm relay activation (Prn relay)

Activating this parameter allows the status of the local relay to be repeated by the relay on the printer board. The logic, that is, de-energised or energised during an alarm depends on setting of the corresponding dip-switch on the board. In this case, the relay can only be set for permanent activation, that is, activated in the presence of an alarm and deactivated when there are no alarms.
With this option enabled, the printer board relay performs the dual function of watch-dog for the RS485 network and signals the alarms generated by PlantWatch..

9.3.5.4 Alarm relay (RL2) logic

Sets the logic of the local alarm relay (normally energised or de-energised) .

9.3.5.5 Function of second relay (RL1)

The second relay (Ref. ***E*** *in figure* ***1.3.1****), normally used for resetting the external modem, may be configured to signal serious alarms corresponding to the internal operation of PlantWatch. In the latter case the logic is fixed, that is, the relay is normally energised and opens only when there is an alarm condition or a alternatively due to a power failure.*

9.3.5.6 High and low frequency analogue sampling period / Digital sampling period

These parameters allow sampling frequency of the variables to be set. For further details see the chapter Variables log.

9.3.5.7 Log full alarm signal

Enabling this parameter allows local and remote signals to be activated for the automatic download of the logs to the service centre and to warn the user of the risk of data loss in the case of failed download via serial line or printer.

9.3.5.8 Reset variable log free space indicator

The generation of the memory full alarms depends on the percentage of the free space available for saving the data. The resetting of this indicator must be selected depending on the mode used to save the log, that is, printing the report or sending the log to a service centre, so as to ensure that failed connection to the service centre or incomplete printing of a report will activate the alarm.

9.3.6 Language selection

L1
Language setup: *English*

Fig. 9.3.6.1

This allows the language used by PlantWatch to display the user interface and compile the faxes, reports and messages to be changed.

10. QUICK CONFIGURATION

PlantWatch is factory-configured with parameters that can be adapted to a vast number of applications. In this way, a solution can be provided to the user who requires quick installation of the product, by setting of just a few fundamental parameters.

The following operations must be performed after installing the network of instruments and any peripherals (printer, modem):

- *Power PlantWatch and Carel instruments connected to it (Ir32, MPX, printer board,...)*
- *Configure the addresses of the instruments*
- *Access the configuration menu, entering the default password: 3*
- *Check and if necessary set the clock from the screen **ma1**.*
- *Select the Automatic unit configuration menu, screen **g3**, and start the procedure*
- *When the procedure is complete and the display shows all the peripherals connected, proceed to the following step. If some peripherals are not detected, check the connections in the RS485 network, the presence of the terminal resistor (120 ohm) and the addresses of the instruments and repeat the previous step.*
  If some peripherals are still not detected, the configuration can be continued by manually selecting the type and the address of these peripherals
- *Select the Unit configuration menu, screen **g2**, and assign the names of the units in a way that is coherent with the function they perform (**the peripheral type field** has already been set by the automatic procedure, and **should not be changed**)*
- *Assign, from screen g1, the name and physical address of the installation, making sure not to use names or addresses already attributed to other installations*
- *Configure, if present, the data required to activate the remote signals; FAX, SMS, call to data processing centre, and test operation from the corresponding test screens.*
- *Set the logic of the alarm relay as per the connections already made.*

11. CONFIGURATION USING PLANTWATCH MANAGER

11.1 Introduction

*Maximum operating flexibility can **only** be achieved for PlantWatch by using the **PlantWatch manager** configuration software, a program that runs under Windows95, 98, NT, and allows the following to be accessed and/or modified:*
- all the configuration parameters
- the templates describing the Carel instruments that can be connected
- the texts displayed and used to create the reports and faxes
All these operations can be performed via direct serial line or modem.

11.1.1 Connections and pre-settings required

The initialisation (setup) operations may be performed "off-line" and saved on file.
Before uploading the configuration to PlantWatch, the corresponding connection must be made. This may be a direct RS232 connection, or alternatively via modem.
For a direct serial connection to PlantWatch, the PLW0PPC000kit must be used. Before starting, check that PlantWatch is in RS232 mode. If the configuration does not include the modem (setting No modem *on screen **m1**), the upload can be started directly. For configurations with internal/external modem connections, on the other hand, direct RS232 mode must be enabled; this can be performed, without modifying the configuration, by pressing the PRG button for 6 seconds. The wait for connection and connection status are displayed by the wait/enabled/connected messages.*
Standard operation is resumed automatically following 60 seconds of inactivity on the serial connection.

11.1.2 Editing and creating of the "templates" that describe the instruments

*The PlantWatch default configuration includes a standard classification for the alarms (long delayed, short delayed and instant), for the variables to acquire and the corresponding sampling parameters. Custom configurations may **only** be created using the optional PlantWatch Manager program.*

11.1.3 Multiple "templates" and self-configuration

If PlantWatch features a configuration containing multiple definitions of the same peripheral (for example, more than one IR32C), the PlantWatch self-configuration function will no longer be available, that is, the first type found for each model will be used. The pCO and the pCO² are recognised as two distinct peripherals, however it is not possible to distinguish the applications used; therefore, if PlantWatch contains the "template" of more than one pCO application, only manual configuration will be possible.

12. INSTRUMENT CONFIGURATION

12.1 RS485 RS232 direct mode

PlantWatch can be used as an RS232 – RS485 serial converter, with the prospect of future uses with other instrument configuration softwares . In this case, once having entered the addresses of the instruments, the parameters can be programmed automatically by connecting a personal computer to the PlantWatch RS232 serial line using the adapter PLW0PPC000.
To enter converter mode, proceed as follows:
Start the program and follow the instructions.
*Before starting the transmission of the parameters press the (***Prg***) button on PlantWatch for 6 seconds.*
*When the screen "*PC setup*" appears, press the (⇓) button, which will display the following screen:*

Rs485<->Rs232 *Enable: No*

Fig. 12.1.1

Then press the (↵) button to activate the 232-485 direct mode.
From this moment on PlantWatch will act as an RS232- RS485 converter.
After an interval of 2 minutes without any data being transmitted in either direction, PlantWatch will automatically disable this mode, and return to normal operation; normal operation can be immediately resumed in any case by setting the Enable *field to the value*: No.

13. TECHNICAL SPECIFICATIONS

13.1 Software characteristics

Software class and structure	A
Maximum number of instruments managed	32
Events/alarms saved	guaranteed 4670 maximum number 9000
Max. variables saved (log)	32 analogue
	64 digital
Recording duration with 32 analogue variables at 10 minutes and 64 digital variables at 20 seconds	13.5 days
SMS protocol via PSTN service centre	TAP/UCP
Line speed to external PSTN modem	115,200 baud
Default PSTN modem	US-Robotics

Table 13.1.1

13.2 Electrical and mechanical specifications

Power supply	
Version PLW00B0000	230Vac ±15% 50/60Hz PTC internal protection
Version PLW00U0000	115Vac ±15% 50/60Hz PTC internal protection
Power input	approx. 10VA
Connector	screw terminals for wires with a cross-section of 2.5mm², AWG12
Digital outputs	
Alarm relay	230Vac switching contacts, contacts protected by 250Vac varistor 2A max resistive/inductive load
Relay for modem reset	230Vac normally open, contacts protected by 250Vac varistor 2A max resistive/inductive load
Type of relay action	1C (microswitching)
Maximum number of switchings	100,000
Insulation between the relays and the very low voltage parts	reinforced
Insulation between the relays and the front panel	reinforced
Insulation between the two relays	reinforced
Insulation between the terminals of the same relay	functional
Insulation between the very low voltage parts and the front panel	primary
Interfaces	
optically-insulated asynchronous RS485 serial	
Connector	3-way screw terminals for wires with minimum 0.14mm² and maximum 1.5mm² cross-section
Insulation between the parts in very low voltage and the serial output	functional (<50V)
Maximum cable length	1km with AWG20/22 twisted pair and shielded cable, capacitance between the wires <90pF/m
Baudrate	1,200-19,200 Baud
RS232 serial	
Connector	8-way telephone connector

Maximum cable length	*10m, cable capacitance < 2500pF*
Baudrate	*1,200-115,200 Baud*
33.6 PSTN modem (version PLW00M0000 only)	
Connector	*standard RJ-11 for direct connection to the telephone line*
Approval	*The modem is approved according to the CTR21 specifications, and can thus be used in the following countries:* ***Austria, Belgium, Denmark, Finland, France, Greece, Iceland, Ireland, Luxembourg, the Netherlands, Portugal, Sweden, United Kingdom.*** *In* ***Germany*** *an appropriate RJ-11 adapter must be used for all lines that receive the measurement impulses. In other countries an external modem must be used, approved according to local standards.*
Various	
Display	*alphanumeric 4x20 LCD module, not back-lit*
Keypad	*silicon, 6 buttons*
microprocessor	*Hitachi H8-3002 14.7 MHz clock*
ROM	*2 Mbyte flash for code, parameters and logs*
RAM	*256 Kbyte*
Real time clock powered by lithium battery	

Table 13.1.2

13.3 General characteristics

Operating conditions	*0T40 with 20-80% humidity, non-condensing*
Storage conditions	*0T70 with 20-80% humidity, non-condensing*
Index of protection	*IP 65*
Period of stress across insulating parts	*long*
Category of resistance to fire and heat	*self-extinguishing UL94-V0 category D*
Immunity against voltage surges	*Category II*
Assembly	*wall-mounted*
PTI of insulating materials	*250V*
Class of protection against electrical shock	*Class II*

Table 13.1.3

13.4 Dimensions

Width	*190cm*
Height	*160cm*
Depth	*65cm*

Table 13.1.4

Carel reserves the right to modify or change its products without prior notice

Notes:

CAREL srl
Via dell'Industria, 11 - 35020 Brugine - Padova (Italy)
Tel. (+39) 049.9716611 Fax (+39) 049.9716600
http://www.carel.com - e-mail: carel@carel.com

Agent:

Code: +030221221 rel. 2.0 dated 26/11/01